UTA

/ DESIGN CRITERIA MANUAL

April 2026

Table of Contents

CHAPTER 1 GENERAL REQUIREMENTS 1

1.1 PURPOSE 1
1.2 TRANSIT SYSTEM GOALS 1
1.2.1 Proven Hardware 2
1.2.2 Design Life 2
1.2.3 Service Integration 3
1.2.4 Risk Management 3
1.3 SYSTEM SAFETY AND SECURITY 3
1.3.1 Safety Considerations 3
1.3.2 System Security Goals 5
1.4 WEATHER CONDITIONS CRITERIA FOR SYSTEMS DESIGN 6
1.5 RELATED DOCUMENTS 6
1.6 PROJECT DOCUMENTATION AND RECORD DRAWINGS 6
1.7 SPECIFIC CHAPTERS 7

CHAPTER 2 ENVIRONMENTAL 1

2.1 GENERAL 1
2.2 ENVIRONMENTAL RESOURCES 1
2.2.1 Acquisitions and Relocations 1
2.2.2 Air Quality 2
2.2.3 Biological Resources 2
2.2.4 Community Impacts 2
2.2.5 Economic Impacts 3
2.2.6 Energy Conservation 3
2.2.7 Environmental Justice 3
2.2.8 Geology and Soils 3
2.2.9 Hazardous Materials 3
2.2.10 Historic, Architectural, Archaeological, and Cultural Resources 4
2.2.11 Traffic 6
2.2.12 Transit Noise and Vibration 6
2.2.13 Safety/Security 8
2.2.14 Section 4(f) Requirements 8
2.2.15 Visual 8
2.2.16 Water Resources 9

CHAPTER 3 RUNNING WAY AND TRACK ALIGNMENT 1

3.1 INTRODUCTION 1
3.2 BRT RUNNING WAYS 1
3.2.1 BRT Running Ways – General 1
3.2.2 Types of BRT Running Ways 2
3.2.3 Other BRT Design Considerations 6
3.2.4 Pavement Design 6
3.2.5 Design Vehicle 7
3.2.6 Access by Non-Bus Traffic and Pedestrian Access 7
3.3 COMMUTER RAIL TRACK ALIGNMENT 8
3.3.1 Design Speed 8
3.3.2 Track Center Spacing 9
3.3.3 Clearances - General 9

3.3.4 Horizontal Alignment 9
3.3.5 Vertical Alignments 17
3.4 LIGHT RAIL TRANSIT (LRT) TRACK ALIGNMENT 19
3.4.1 General 19
3.4.2 Design Speed 20
3.4.3 Semi-Exclusive LRT Track in Dedicated Right-of-Way Alignment Criteria 20
3.4.4 Semi-Exclusive Joint Use LRT/Freight Track Alignment Criteria 28
3.4.5 LRT Track in Existing Streets Alignment Criteria 31
3.4.6 LRT Lead and Yard Track and Freight Industrial Track Alignment Criteria 33
3.4.7 Clearances 35
3.5 STREETCAR TRACK ALIGNMENT CRITERIA 48
3.5.1 Horizontal Alignment 49
3.5.2 Vertical Alignment 52
3.5.3 Clearances 53

CHAPTER 4 TRACKWORK 1

4.1 INTRODUCTION 1
4.2 TRACK STANDARDS 1
4.3 COMMUTER RAIL GENERAL 1
4.3.1 Description 1
4.3.2 References 1
4.3.3 CRT Track Standards 2
4.3.4 CRT Track Classification 2
4.3.5 Types of Track 3
4.3.6 Track Materials 3
4.3.7 Special Trackwork 6
4.3.8 Miscellaneous Track Components 6
4.3.9 Fill 7
4.4 LIGHT RAIL/STREETCAR GENERAL 7
4.4.1 LRT Track System 8
4.4.2 Track Types 9
4.4.3 Track Gauge 15
4.4.4 Track Construction Tolerances 16
4.4.5 Traction Power—Impact on Track 17
4.4.6 Signaling and Train Control Impact on Track 17
4.4.7 Ballast, Subballast, and Subgrade 18
4.4.8 Concrete Ties, Timber Ties, and Switch Ties 19
4.4.9 Running Rail 21
4.4.10 Rail Deflection 23
4.4.11 Emergency Guardrail 26
4.4.12 Tie Plates for Timber Ties 27
4.4.13 Special Trackwork Plates for Timber Switch Ties 27
4.4.14 Derails 29
4.4.15 Special Trackwork 29
4.4.16 Switch Machines—Power Operated and Manual 33
4.4.17 Rail Expansion Joints 33
4.4.18 At-Grade Crossings 34
4.4.19 Miscellaneous Track Appurtenances 34
4.4.20 Embedded Track Drains 35
4.4.21 Rail Lubricators 35

CHAPTER 5 CIVIL WORK 1

5.1 General 1
5.2 Surveying and Mapping 1
5.2.1 Survey Control System 1
5.3 Roadway Elements 2
5.3.1 General 2
5.3.2 Applicable Standards 3
5.3.3 Grading 3
5.3.4 Traffic Lane Widths 3
5.3.5 On-street Parking 4
5.3.6 Curbs, Wheelchair Ramps, and Curb Cuts 4
5.3.7 Sidewalks and Park Strips 4
5.3.8 Driveways 5
5.3.9 Paving 5
5.4 Bus Facilities 6
5.4.1 Local Bus Service 6
5.4.2 Turning Radii 6
5.4.3 Bus Stop Placement Criteria, Park and Ride Lots, and Off-Street Bus Stations 6
5.4.4 Bus Shelter Pads 6
5.4.5 Bus Loading Zones 6
5.5 Maintenance of Traffic 7
5.6 Drainage 7
5.6.1 General 7
5.6.2 Submittals 8
5.6.3 Drainage Provisions 8
5.6.4 Hydrology and Hydraulics 9
5.6.5 Design Method 9
5.6.6 Storm Frequency 10
5.7 Right-of-Way 13
5.7.1 General 13
5.7.2 Types of Property Ownership and Rights 14
5.7.3 At-Grade Construction 15
5.7.4 Right-of-Way Information Requirements 18
5.8 Fencing 18

CHAPTER 6 UTILITIES 1

6.1 General 1
6.2 Existing Information 1
6.2.1 Ownership by Others 2
6.3 Utility Agreements 3
6.3.1 Master Utility Agreements 3
6.3.2 Supplemental Utility Agreements 3
6.3.3 Betterment Utility Agreements 3
6.4 Scope of Relocation 4
6.4.1 Drawings 4
6.5 Utah Transit Authority Restricted Utility Area 5
6.6 Conflicting Utilities 5
6.6.1 Crossing Utilities (Underground) 6
6.6.2 Crossing and Parallel Utilities (Overhead) 7
6.6.3 Parallel Utilities (Underground) 8
6.6.4 Abandoned Utilities 8
6.7 Corrosion protection 9
6.8 Natural Gas Lines 9

6.8.1 Standards 9
6.8.2 Requirements within Railroad ROW 10
6.9 SANITARY SEWERS 10
6.9.1 Standards 10
6.9.2 General Requirements 10
6.9.3 Manhole Locations 11
6.10 UNDERGROUND COMMUNICATIONS SYSTEMS 11
6.11 WATER MAINS 12
6.11.1 Standards 12
6.11.2 Requirements 12
6.12 LIQUID-PETROLEUM PIPELINES 13
6.12.1 Standards 13
6.13 STREETLIGHTS AND TRAFFIC SIGNALS 13
6.13.1 Standards 13
6.14 OVERHEAD UTILITY LINES 14
6.14.1 Standards 14

CHAPTER 7 STRUCTURAL 1

7.1 GENERAL 1
7.1.1 Introduction 1
7.1.2 Design Codes, Manuals, and Specifications 1
7.1.3 Responsibility for Geotechnical Information 2
7.1.4 Loads and Forces 2
7.1.5 Differential Settlement 8
7.1.6 Earthquake (EQ) 8
7.1.7 Horizontal Earth Pressure (E) 9
7.1.8 Hydrostatic Pressure and Buoyancy (B) 9
7.1.9 Wind Load on Structure (WS) 9
7.1.10 Wind Load on Live Load (WL) 10
7.1.11 Force from Stream Current, Floating Ice, and Drift 10
7.1.12 Thermal Force (T) 11
7.1.13 Pier Protection Walls 15
7.2 SPECIAL DESIGN REQUIREMENTS 15
7.2.1 Vibration Limitations 15
7.2.2 Track Work 15
7.2.3 Fatigue 15
7.2.4 Uplift 15
7.2.5 Friction 15
7.2.6 End Diaphragms 16
7.2.7 Reinforced and Prestressed Concrete Design 16
7.2.8 Emergency Access and Provisions 17
7.2.9 Improvements on UPRR or Other Non-UTA Right-of-Way 18
7.3 MATERIALS 18
7.3.1 General 18
7.3.2 Fire Protection of Structures 18
7.3.3 Structural Steel 19
7.3.4 Reinforced and Prestressed Concrete 19
7.4 EARTH RETAINING STRUCTURES 20
7.4.1 General 20
7.4.2 Types of Retaining Walls, Abutments, and Wingwalls 20
7.4.3 Soils and Geological Criteria 20
7.4.4 Elastomeric Bearings 20

7.4.5 Improvements on UPRR or Other Non-UTA Right-of-Way 21

CHAPTER 8 STATIONS AND STOPS 1

8.1 GENERAL 1
8.1.1 Scope 1
8.1.2 Codes and Standards 1
8.1.3 General Design Parameters 2
8.2 BRT PLATFORMS 3
8.2.1 Configuration 3
8.2.2 EV Bus Charging 6
8.3 CRT PLATFORMS 6
8.3.1 Configuration 6
8.4 LRT PLATFORMS 8
8.4.1 Configuration 8
8.5 STREETCAR PLATFORMS 9
8.5.1 Configuration 9
8.6 GENERAL STATION REQUIREMENTS 10
8.6.1 Platform Surface 10
8.6.2 Fare Vending Equipment 10
8.6.3 Amenities and Provisions 11
8.6.4 Signing and Communications 11
8.6.5 Public Address (PA) System 13
8.6.6 Advertising 14
8.6.7 Railings 14
8.6.8 Maintenance Space and Procedures 14
8.6.9 Circulation Elements 14
8.6.10 Lighting 18
8.6.11 Other Station Considerations 22
8.6.12 Crime Prevention and Vandal Resistance 25
8.6.13 General Materials and Finishes Guidelines 26

CHAPTER 9 LANDSCAPING 1

9.1 GENERAL 1
9.2 OBJECTIVES (GOALS) 1
9.3 REFERENCE CODES AND LANDSCAPE STANDARDS 3
9.4 LANDSCAPING CONSIDERATIONS AND CRITERIA 4
9.4.1 Climate Control 4
9.4.2 Height Requirements 5
9.4.3 Movement Control 5
9.4.4 Grading and Drainage 5
9.4.5 Berming 5
9.4.6 Slope Stabilization 6
9.4.7 Retaining Walls 6
9.4.8 Planter Walls/Landscape Walls 6
9.4.9 Lighting and Signage Interface 6
9.4.10 Irrigation 7
9.5 SECURITY/SAFETY CONSIDERATIONS 8
9.6 SITE SPECIFIC OBJECTIVES 9
9.6.1 Station 9
9.6.2 Platform 9
9.6.3 Relationship of the Park-and-Ride Facility to the Platform 9
9.6.4 Parking Lot (Park-and-Ride) 10

9.6.5 Bus Drop-Off to the Platform 10
9.6.6 Kiss-and-Ride Relationship to the Platform 10
9.6.7 Railroad Right-of-Way 11
9.7 RECOMMENDED PLANT LIST—LOW WATER USE 11
9.7.1 Trees 12
9.7.2 Vines and Ground Covers 13
9.7.3 Flowers and Forbs 14
9.7.4 Ornamental Grasses 14
9.8 PLANT MATERIALS 15
9.8.1 Canopy Trees 15
9.8.2 Understory/Decorative Trees 15
9.8.3 Conifers 15
9.8.4 Shrubs and Hedges 15
9.8.5 Vines and Ground Cover 16
9.9 TREES 16
9.9.1 Patterns 16
9.9.2 Size Guidelines 17
9.9.3 Tree Pits 17
9.9.4 Tree Grates 18
9.9.5 Tree Guards 18
9.9.6 Tree Root Barriers 18
9.9.7 Guying and Staking 18
9.9.8 Topsoil 18
9.9.9 Mulch 19

CHAPTER 10 TRAFFIC CONTROL AND SIGNALS 1

10.1 INTRODUCTION 1
10.1.1 Responsible Owner 1
10.2 APPLICABLE STANDARDS 2
10.3 AGENCY COORDINATION 3
10.3.1 Local Agency Requirements and Coordination 3
10.3.2 Coordination with Adjacent Railroads 3
10.4 GENERAL OPERATIONS 3
10.4.1 Mixed Flow Operations 3
10.4.2 Dedicated Running Way Operations 4
10.5 DESIGN GUIDELINES 4
10.5.1 Traffic Signal Items 4
10.5.2 Communications/Interconnect 5
10.5.3 TSP/Signal Timing & Coordination 6
10.5.4 BRT Detection 6
10.5.5 LRT Detection 8
10.5.6 Railroad Preemption 9
10.5.7 Queue Cutter Signals 10
10.5.8 Channelization 10
10.5.9 Turns Crossing the Tracks at Signalized Intersections 11
10.6 TRAFFIC SIGNAL HARDWARE AND SOFTWARE 11
10.7 SIGNS 12
10.8 PEDESTRIAN CONSIDERATIONS 12
10.8.1 General 12
10.8.2 Pedestrian Movements at and Near Stations 12
10.8.3 Crosswalks 13
10.8.4 Islands 13

10.9 GRADE CROSSING WARNING DEVICES 13
10.9.1 Public Highway-Rail Grade Crossings 13
10.9.2 Private Highway-Rail Grade Crossings 14
10.10 BRT PAVEMENT MARKINGS 14

CHAPTER 11 TRANSIT VEHICLES 1

11.1 GENERAL DESCRIPTION BUS RAPID TRANSIT VEHICLE 1
11.1.1 Vehicle Configuration 1
11.1.2 Boarding and Alighting 2
11.1.3 Electrical Vehicle Supporting Infrastructure 3
11.1.4 Vehicle Finishes 3
11.2 COMMUTER RAIL VEHICLES 4
11.2.1 General Description 4
11.2.2 Locomotive 5
11.2.3 Commuter Passenger Vehicles 5
11.3 HIGH VOLTAGE SYSTEM 6
11.4 LIGHT RAIL VEHICLE 7
11.4.1 General Description 7
11.4.2 Weight Constraints and Design Loading 8
11.4.3 Light Rail Vehicle Dimensions 8
11.4.4 Vehicle Performance 9

CHAPTER 12 ELECTRIC TRACTION POWER SUPPLY AND DISTRIBUTION SYSTEM 1

12.1 INTRODUCTION 1
12.2 REQUIREMENTS 1
12.2.1 Traction Power Substations 1
12.2.2 DC Feeder System 2
12.2.3 Overhead Contact System (OCS) 2
12.2.4 Signal and Communications System Interface 2
12.2.5 Sectionalization 2
12.2.6 Design Environment 3
12.2.7 Codes and Standards 3
12.3 TRACTION POWER SUBSTATIONS 4
12.3.1 General 4
12.3.2 System Operating Requirements 4
12.3.3 Basis for Substation Location, Spacing, and Rating 5
12.3.4 Substation Power Supply 6
12.3.5 Substation Equipment 6
12.3.6 Substation Enclosure 8
12.3.7 Substation Foundation 9
12.3.8 Substation Grounding 9
12.3.9 Ventilation 10
12.3.10 Noise Level 10
12.3.11 Miscellaneous 10
12.4 DC FEEDER SYSTEM 13
12.4.1 General 13
12.4.2 Cables 14
12.4.3 Raceways 15
12.5 OVERHEAD CONTACT SYSTEM 15
12.5.1 General 15
12.5.2 OCS Configuration 17
12.5.3 Operations 18

12.5.4 Contact Wire Height 18
12.5.5 Vehicle Data 19
12.5.6 Climate Conditions 19
12.5.7 Loading 19
12.5.8 Span Lengths and Staggers 20
12.5.9 OCS Conductors 20
12.5.10 Construction and Maintenance Tolerance 21
12.5.11 Factor of Safety 21
12.5.12 Poles and Foundation 21
12.5.13 Electrical Clearances 23
12.5.14 OCS Support Systems 24
12.5.15 OCS Registration Systems 25
12.5.16 Disconnect Switches 25
12.5.17 OCS Tensioning 25
12.5.18 OCS Grounding and Bonding 26
12.5.19 Surge Protection 26
12.6 NEGATIVE RETURN PATH AND STRAY CURRENT CONTROL 26

CHAPTER 13 TRAIN CONTROL 1

13.1 GENERAL (CRT) 1
13.1.1 Definitions 1
13.1.2 System Description 6
13.1.3 Systems Assurance 7
13.1.4 System Safety 8
13.1.5 Recommended Spare Parts List 8
13.1.6 Circuit Design Drawings 9
13.1.7 Technical Literature 9
13.1.8 As-In Service Drawings and Logic 10
13.1.9 Warranty and Initial Provisioning 11
13.1.10 System Interfaces 12
13.1.11 Functional Design Requirements 14
13.1.12 Signal Equipment and Technologies 24
13.1.13 Installation, Testing, Manuals, and Training 30
13.2 LRT AND STREETCAR SIGNAL SYSTEM 30
13.2.1 General (LRT and Streetcar) 30
13.2.2 Signal System Description 30
13.2.3 Interface Requirements 33
13.2.4 Site Work 34
13.2.5 Electrical Requirements for Signal Work 34
13.2.6 Functional Design Requirements 34
13.2.7 ABS Signal Block Design 38
13.2.8 Highway Rail Grade Crossing Warning 39
13.2.9 Interlocking Control 40
13.2.10 Yard 42
13.2.11 Signal Power 42
13.2.12 Signal Equipment and Technologies 43
13.2.13 Highway Crossing Warning Devices 45
13.2.14 Equipment Housings 45
13.2.15 Wire and Cable 46
13.2.16 Installation, Testing, Manuals, and Training 47

CHAPTER 14 COMMUNICATIONS 1

14.1 General 1
14.2 Codes and Standards 3
14.3 Installation, Testing, Manuals, and Training 3
14.4 Warranty and Initial Provisioning 4
14.5 As-Built Drawings 4
14.6 Communications Systems Interfaces 5
14.6.1 Operational Compatibility 6
14.6.2 Electromagnetic Interference (EMI) 7
14.7 System Safety and System Security 7
14.7.1 IP Security Camera System 7
14.7.2 Emergency Communication Devices 9
14.8 Communication Transmission System 10
14.8.1 Fiber Optic Conduit Duct Bank 11
14.8.2 Station I.T. Data Fiber Optic Cable 11
14.8.3 Signaling Communications & TPSS SCADA Fiber Optic Cable 12
14.8.4 Advanced Traffic Management (ATMS) Conduit Duct Bank and Fiber Optic Cable System 13
14.8.5 Microwave Transmission System 13
14.9 Fare Collection Devices 13
14.10 Electronic Passenger Information Signs 14
14.11 Telephone System 14
14.11.1 VOIP Telephones 14
14.12 Radio Systems 15
14.12.1 Two-Way Radio 16
14.12.2 Vehicle Radios 17
14.12.3 Mobiles and Portable Radios 17
14.13 Rail Transit Communications 17
14.13.1 Wayside Communications Equipment 17
14.13.2 Central Control System (CCS) and SCADA Remote Terminal Units (RTUs) 18
14.14 CRT Communications 19
14.14.1 Fire and Intrusion Detection System Alarms 19
14.15 Communications Power and Raceway 20
14.15.1 Communications Raceway 20
14.15.2 Communications Power 21
14.16 Battery and UPS Back-up Power Supply 21

CHAPTER 15 FARE COLLECTION EQUIPMENT 1

15.1 General 1
15.1.1 Conditions of Service 1
15.2 Handicapped Accessibility 2
15.3 Additional Design Criteria 3
15.3.1 Power Supply 3
15.3.2 Mounting 4
15.3.3 Fare Collection Communications 4

CHAPTER 16 CORROSION CONTROL 1

16.1 General 1
16.1.1 Electric Bus Charging 1
16.2 Scope 2
16.3 Standards and Codes 2
16.4 Pre-Design Survey and Testing 4
16.5 Soil and Water Corrosion Control 4
16.5.1 Materials of Construction 6

16.5.2 Safety and Continuity of Operations 7
16.5.3 Accessibility of Installations 7
16.5.4 Special Considerations 7
16.5.5 Protective Coatings 7
16.5.6 Cathodic Protection 11
16.6 STRAY CURRENT CORROSION CONTROL 12
16.6.1 Baseline Corrosion Survey 14
16.6.2 Baseline Stray Current Survey 14
16.7 TRACKWORK 15
16.7.1 Ballasted Track Construction 16
16.7.2 Embedded Track Construction 16
16.7.3 Vehicle Grade Crossing and Pedestrian Crossing Track Construction 16
16.7.4 Direct Fixation Track Construction 16
16.7.5 Maintenance Shops and Yard 16
16.7.6 Special Trackwork and Hardware 17
16.7.7 Hardware 17
16.7.8 Track-to-Earth Resistance Testing 17
16.8 TRACTION POWER FACILITIES AND SUBSTATIONS 17
16.8.1 Traction Power Substations 17
16.8.2 Overhead Contact System 18
16.8.3 Negative Distribution System 19
16.8.4 Resistance-to-Earth Criteria 19
16.9 UTILITY STRUCTURES 20
16.9.1 Facilities Owned by Others 20
16.9.2 Bridge Structures 22
16.10 ATMOSPHERIC CORROSION CONTROL 23
16.10.1 Scope 23
16.11 GROUNDING 26
16.11.1 Scope 26
16.11.2 Design and Coordination of Grounding Systems 26

CHAPTER 17 YARDS AND SHOPS 1

17.1 INTRODUCTION 1
17.1.1 Standards, Codes, and Guidelines 1
17.2 COMMUTER RAIL YARDS AND SHOPS 2
17.2.1 Operating Requirements 2
17.2.2 Maintenance Shop 5
17.3 LRT YARDS AND SHOPS 7
17.3.1 General Requirements 7
17.3.2 Yard and Shop Facilities 7
17.3.3 LRT Heavy Maintenance Facility and Yard Requirements 8
17.3.4 LRT Light Maintenance Facility and Yard Requirements 10
17.4 BUS MAINTENANCE FACILITIES 11

CHAPTER 18 RAIL TRAILS 1

18.1 GENERAL 1
18.2 PROJECT IMPLEMENTATION 4
18.3 SITE WORK 4
18.3.1 Setback 5
18.3.2 Fencing 5
18.3.3 Trail Surface 6
18.3.4 Drainage 6

18.3.5 Landscaping *7*
18.3.6 Lighting *8*
18.3.7 Signs *8*
18.3.8 Striping *9*
18.3.9 Roadway Interface Features *9*
18.3.10 Restroom Facilities *9*
18.4 CROSSINGS 9

CHAPTER 19 PEDESTRIAN CROSSINGS 1

19.1 GENERAL 1
19.2 STANDARDS 1
19.3 DESIGN INTENTIONS 1
19.4 IMPLEMENTATION 1
19.5 DEFINITIONS 2
19.6 PEDESTRIAN GRADE CROSSING DESIGN 2
19.6.1 Grade Crossing Diagnostic Review *2*
19.6.2 Diagnostic Team *2*
19.6.3 Existing Conditions and Hazard Assessment *3*
19.6.4 Pedestrian Hazard Evaluation and Mitigation *6*

CHAPTER 20 PARK AND RIDE LOTS 1

20.1 GENERAL 1
20.2 SCOPE 1
20.3 CODES AND STANDARDS 1
20.4 LIGHTING 2
20.5 GENERAL PARK AND RIDE SITE DESIGN GUIDELINES 2
20.5.1 Vehicular Entrances and Exits to Station Site Facilities *2*
20.5.2 Kiss-and-Ride Facilities *3*
20.5.3 Automobile Parking Facilities *7*
20.5.4 Motorcycle Parking *7*
20.5.5 Bicycle Storage *7*
20.5.6 Borders of Parking Areas *8*
20.5.7 Pedestrian Access *8*
20.5.8 ADA *8*
20.5.9 Park-and-Ride Entrance Signs *9*
20.5.10 Snow Removal *9*
20.6 CRIME PREVENTION AND VANDAL RESISTANCE 9
20.6.1 System Safety and Security *10*
20.6.2 EV Charging *10*

DESIGN CRITERIA MANUAL

/ CHAPTER 1

GENERAL REQUIREMENTS

Table of Contents

CHAPTER 1 GENERAL REQUIREMENTS 1

1.1 PURPOSE 1
1.2 TRANSIT SYSTEM GOALS 1
1.2.1 Proven Hardware 2
1.2.2 Design Life 2
1.2.3 Service Integration 3
1.2.4 Risk Management 3
1.3 SYSTEM SAFETY AND SECURITY 3
1.3.1 Safety Considerations 3
1.3.2 System Security Goals 5
1.4 WEATHER CONDITIONS CRITERIA FOR SYSTEMS DESIGN 6
1.5 RELATED DOCUMENTS 6
1.6 PROJECT DOCUMENTATION AND RECORD DRAWINGS 6
1.7 SPECIFIC CHAPTERS 7

CHAPTER 1 GENERAL REQUIREMENTS

1.1 Purpose

The material in the following chapters provides a uniform basis for project design of bus rapid transit (BRT), light rail transit (LRT), Streetcar, and commuter rail transit (CRT) systems. These criteria apply to all projects, including new construction, remodel, and rehabilitation projects.

For bus stops, wayfinding signs, and State of Good Repair projects, the criteria as set forth herein shall govern, or the appropriate governing documentation for these elements will be referenced herein.

For bus stop design details, see the UTA Bus Stop Master Plan, latest version.

These criteria serve as guidelines and do not substitute for engineering judgment and sound engineering practice. Exceptions may apply in special cases. Applications for exceptions to the criteria, deviations from the criteria, changes to the criteria, additions to the criteria, and other questions shall be submitted in writing to UTA per UTA Capital Development Procedures 3C Design Criteria Section 5.2 and shall be approved in writing before any modification is implemented.

1.2 Transit System Goals

The basic goal of UTA's transit systems is to provide improved public transportation systems in a cost-effective, environmentally sensitive, and socially responsible manner. The design of system elements will be based on a "design to cost" philosophy, where the designer works with UTA and the system's stakeholders to define the scope of each system, ensuring it can be completed within the available budget.

UTA is responsible for delivering safe, reliable, cost-effective, and efficient public transportation within UTA's service areas. UTA is constantly seeking to provide new and improved services to meet the transportation needs of the public and increase operational efficiency.

The principal objectives of the UTA system are to:

- Facilitate the safe and cost-effective movement of people.
- Provide efficient, high-capacity transit service to the communities located within UTA's service area.

- Enhance economic potential in the corridor by improving access to existing and planned employment and activity centers by creating transit-oriented development (TOD) opportunities.
- Support regional plans and policies that describe a balanced transportation system.
- Support and contribute to regional air quality goals.

1.2.1 Proven Hardware

The transit system shall be designed to use proven subsystems hardware and design concepts. Subsystems shall be supplied by established manufacturers, have a documented operating history of previous and current usage, and be available off-the-shelf, as far as practicable. The same requirements shall apply to spare parts. Waiver of these requirements shall be considered only where the alternative subsystem offers substantial technical and cost advantages, is in an advanced state of development, and has accumulated substantial test data under near-revenue conditions.

Designs and specifications shall be prepared in such a way as to encourage competitive bidding by established manufacturers of transportation equipment in accordance with current procurement guidelines. Industry guidelines from recognized and established organizations such as the American Railway Engineering and Maintenance-of-Way Association and the Utah Department of Transportation shall be used.

1.2.2 Design Life

The system's structures, such as bridges and culverts, shall be designed for a minimum of 75 years. Stations shall be designed for a 25-year life, and other fixed facilities, including administrative and maintenance buildings, shall be designed for continued operation over a minimum period of 50 years before complete refurbishment and renovations are necessary due to wear.

Major facilities system equipment shall also be designed for a minimum of 15 years before complete replacement becomes necessary, assuming that approved maintenance policies are followed.

Major infrastructure system equipment shall also be designed for a minimum of 25 years before complete replacement becomes necessary, assuming that approved maintenance policies are followed.

Where possible, the functional life and capacity of the system shall be designed to match design life of a system's element or be sufficiently scalable to accommodate future expansion.

1.2.3 Service Integration

Each system and/or project shall be designed as an integral part of the overall UTA transportation system. Design considerations shall include efficient passenger interchange to and from private and other public transportation modes. Incorporate active transportation elements where feasible.

1.2.4 Risk Management

A Risk Management strategy, proportional to the size and complexity of each system, shall be implemented to maintain the system on budget and on schedule. Risks identified and tracked shall include items that may affect the successful implementation of the system.

1.3 System Safety and Security

The primary safety goal of the transit system is to achieve the highest practicable level of safety while maintaining operational and cost effectiveness. All vehicles, equipment, infrastructure, buildings, and facilities shall be designed in accordance with all relevant codes and standards and maintained to ensure safe operation. Safety and security are to be priority considerations in the planning and execution of all work on the system. Decisions made during all phases of system development shall be based on UTA's current Transit Agency Safety Plan (TASP).

1.3.1 Safety Considerations

The inherent safety of a transit system is most significantly influenced by the design of the system, particularly in its interaction with vehicles and pedestrians during operations. Designers shall be cognizant of, plan for, and complete designs that prioritize the safest means of interaction between travel modes. Required safety items are incorporated in the technical sections of this Design Criteria Manual. These safety items shall be included in the design plans and the detailed specifications prepared for the construction and procurement of physical systems.

1.3.1.1 ADA

All design elements will consider and accommodate customers and the public as determined by the Americans with Disabilities Act.

1.3.1.2 Signage

Standardized systems and signs should be utilized to provide the public with consistent, meaningful warnings, and regulatory information. Signage should be provided such that it does not interfere with rail vehicle, automobile, or pedestrian sight-lines or obstruction within the right of way. For details on wayfinding and signage standards, refer to the UTA Wayfinding & Signage Sign Schedule and Drawing Package, latest version.

1.3.1.3 Grade Crossings (LRT, CRT and Streetcar)

All rail at-grade crossings that are not traffic signal-controlled shall have automatic crossing gates and raised medians. Quad gate intersections shall be considered where medians are not practical, and where budget, geometric/site, and traffic conditions warrant their use. Paint and message striping shall comply as required by the Utah MUTCD and UDOT design standards.

1.3.1.4 Hazard Identification and Mitigation

UTA employs the "21 box" Risk Assessment Matrix, which yields hazard ratings of High, Serious, Medium, Low, and Eliminated. UTA's hazard mitigation procedures are outlined in Chapter 2, "Risk Management," of the Transit Agency Safety Plan (TASP). The simplified process of hazard mitigation follows a "Find > Fix > Follow Up" approach to identify hazards, implement corrective actions, and check the effectiveness of the mitigation. The most effective corrective action is to eliminate the hazard.

One of UTA's top core values is safety. To foster and maintain a consistent culture of safety among its employees and contractors, UTA has developed an official Transit Agency Safety Plan (TASP). The TASP covers a variety of safety-related topics, including the process used to identify hazards early during design so that the risk severity of any identified hazards can either be eliminated or mitigated to the lowest levels possible.

UTA recognizes that to effectively identify and assess the risk levels of potential hazards for an individual project, collaboration between UTA and the contractor's design team is required. Section 3.6 'System Safety and Security Certification' of UTA's TASP outlines the processes to be followed to develop an individual Safety and Security Certification Plan (SSCP) required for each capital construction project. For larger FTA-funded capital projects that require a Safety and Security Certification (SSC) program, a Safety and Security Management Plan (SSMP) is also required, in addition to an SSCP.

The Preliminary Hazard Analysis (PHA), Operational Hazard Analysis (OHA), Management of Change (MOC), and Hold Point processes shall be used in the designing, constructing, and activation of the system.

1.3.2 System Security Goals

The primary security goal of the system is to achieve the highest practicable level of security, eliminate or mitigate any hazards or vulnerabilities, and achieve a high level of public confidence in the safety and security of UTA systems, while maintaining operational and cost effectiveness. Secure riders are more likely to use the system, thereby increasing the security of the system by boosting the number of law-abiding citizens within it.

Furthermore, a secure transit system creates an environment enabling employees to focus more effectively on maintaining a safe system.

While most aspects of security are not pertinent to design, there are key concepts that should be considered during the design process:

- Appropriate design of components to:
    - Increase security for the traveling public.
    - Increase the likelihood of criminals being caught.
    - Reduce the potential reward of committing a crime.
    - Take into consideration the Threat and Vulnerability Analysis (TVA).
- Defining and adopting a System Security Plan (SSP)

1.3.2.1 Security Considerations

Designers shall be cognizant of, plan for, and complete designs that take into account the current and future threats and vulnerabilities of the system. It is critical to remember that the transit system can sometimes be the target, not just the location, of crime.

1.3.2.2 Safety Regulations / Criteria

The following design criteria and principles shall be considered, and the following regulations shall be followed:

- Crime Prevention Through Environmental Design (CPTED) principles
- Transportation Security Agency (TSA) rules and regulations
- Department of Homeland Security (DHS) rules and regulations
- 49 CFR 659, 1520, and 1580
- Local and Utah State law

1.4 Weather Conditions Criteria for Systems Design

Systems equipment, including vehicles, signal systems, and fare collection equipment, shall be capable of maintaining operation within the climatic conditions of the Wasatch Front area. All facilities shall be designed to accommodate safe storage and/or removal of snow, melting snow, and ice.

1.5 Related Documents

Other applicable documents, published separately for use in design, include the current editions of:

- CADD standards
- UTA Standard Drawings
- UTA Standard Specifications
- Project Specific Draft/Final Environmental Impact Statement, Environmental Assessment, Environmental Study Report, or Categorical Exclusion
- Operations and Maintenance Plan
- Fleet Management Plans
- Facilities Master Plan
- Bus Stop Master Plan
- System Safety Program Plan
- Rail Activation Plan
- Project Management Plans
- Storm Water Pollution Protection Plans
- Vehicle Specifications

1.6 Project Documentation and Record Drawings

At the completion of design and construction, as-builts (record drawings) shall be prepared by the contractor and engineer and delivered in both pdf and CAD file formats to UTA to record the construction and any changes that occurred between final design plans and completion of construction. In addition, grade crossing as-built plans shall be provided to UTA and UDOT to verify that the items included in the surveillance reports were completed.

1.7 Specific Chapters

Design criteria have been developed for the following areas of work:

Chapter 1	General Requirements
Chapter 2	Environmental
Chapter 3	Running Way and Track Alignment
Chapter 4	Trackwork
Chapter 5	Civil Work
Chapter 6	Utilities
Chapter 7	Structural
Chapter 8	Stations and Stops
Chapter 9	Landscaping
Chapter 10	Traffic Control and Signals
Chapter 11	Transit Vehicles
Chapter 12	Electric Traction Power Supply and Distribution System
Chapter 13	Train Control
Chapter 14	Communications
Chapter 15	Fare Collection Equipment
Chapter 16	Corrosion Control
Chapter 17	Yard and Shops
Chapter 18	Rail Trails
Chapter 19	Pedestrian Crossings
Chapter 20	Park and Ride Lots

END OF CHAPTER 1.

DESIGN CRITERIA MANUAL

/ CHAPTER 2

ENVIRONMENTAL

Table of Contents

CHAPTER 2 ENVIRONMENTAL 1

2.1 GENERAL 1
2.2 ENVIRONMENTAL RESOURCES 1
2.2.1 Acquisitions and Relocations 1
2.2.2 Air Quality 2
2.2.3 Biological Resources 2
2.2.4 Community Impacts 2
2.2.5 Economic Impacts 3
2.2.6 Energy Conservation 3
2.2.7 Environmental Justice 3
2.2.8 Geology and Soils 3
2.2.9 Hazardous Materials 3
2.2.10 Historic, Architectural, Archaeological, and Cultural Resources 4
2.2.11 Traffic 6
2.2.12 Transit Noise and Vibration 6
2.2.13 Safety/Security 8
2.2.14 Section 4(f) Requirements 8
2.2.15 Visual 8
2.2.16 Water Resources 9

CHAPTER 2 ENVIRONMENTAL

2.1 General

This chapter provides guidance and criteria for implementing environmental features into the Utah Transit Authority's (UTA) projects. Its objective is to set the criteria by which to avoid, minimize, and/or mitigate environmental impacts.

Prior to final design and construction of a project, each project will undergo an environmental review. If there is federal nexus, the review will adhere to the National Environmental Policy Act (NEPA). For non-federally funded projects, the review will align with UTA's internal Environmental Review Process. All designs shall align with the UTA Sustainability Plan.

The environmental document for each project will specify mitigation measures, which are intended to reduce the level of adverse effects resulting from implementation of the project. These measures will be formally adopted as part of the project, incorporated into the project design, and reflected in the construction contract documents.

During final design, the designer shall verify that the design remains within the originally cleared environmental footprint. If design changes are outside of the footprint, a re-evaluation will be conducted.

Throughout the construction phase, the contractor is responsible for ensuring that all activities align with the mitigation strategies set out in the environmental document. A mitigation monitoring plan may be prepared for each project. This ensures that all required permits are in place and all mitigation commitments are implemented appropriately. Once the project is operational, UTA will oversee compliance monitoring.

2.2 Environmental Resources

2.2.1 Acquisitions and Relocations

All relocations shall be carried out in accordance with applicable state laws and requirements. For federally funded projects, all relocations shall be carried out in accordance with the Federal Uniform Relocation Assistance and Real Property Acquisitions Act of 1970 (Public Law 91-646), as amended.

2.2.2 Air Quality

Project facilities which provide for the movement of automobiles (i.e., roads and parking lots) shall be designed so as to minimize delays and vehicle idling, thereby minimizing emissions. A "hot spot analysis" will be conducted as required by 40 CFR 93.123 (b)(1) as part of the environmental documentation to determine if transit-related traffic will increase emissions to a level that exceeds National Ambient Air Quality Standards.

A dust control plan shall be submitted to the Utah Division of Air Quality for any construction activities that will disturb more than ¼ acre.

2.2.3 Biological Resources

As a result of construction, it may be necessary to remove some existing vegetation or disturb existing wildlife. To mitigate these losses, the following criteria shall apply:

- UTA will comply with all applicable federal, state, and local regulations and/or ordinances.
- Disturbed areas will be revegetated as quickly as possible.
- Where existing vegetation is removed, new landscaping shall be planted where possible and appropriate. The placement and types of which vegetation shall be specified in an established landscaping plan.
- The landscaping plan should include a master plant list which identifies new vegetation that is designed to conform to the surrounding environment and be consistent with the operations and maintenance requirements of the system.
- The landscaping plan may extend to the system stations, parking, and public areas of fixed system facilities.
- A program shall be developed for the regular maintenance of system-related landscaping.
- If required, the project design and construction shall be coordinated with the U.S. Fish and Wildlife Service, which may include conducting a bird nest survey prior to construction.

2.2.4 Community Impacts

Mitigation measures to facilitate the operation of emergency vehicles during the construction phase may include:

- Implementing traffic control measures to reduce congestion (i.e., use of barriers, proper identification of detours, and proper legible signing).
- Sharing construction schedules and activities with emergency service providers.
- Developing alternative emergency access routes to affected facilities such as hospitals.

2.2.5 Economic Impacts

The following mitigation shall be considered to minimize the impact of construction activities on businesses adjacent to the project:

- Minimizing roadblock durations.
- Schedule construction during off-peak traffic periods in sensitive areas, if possible.
- Maintain maximum possible number of traffic lanes for operation during construction periods.
- Maintain sidewalks for operation or provide alternative walkways.
- Maintain the visibility of businesses through coordination with local merchants, using temporary signage, and implementing other suitable measures.

2.2.6 Energy Conservation

Conservation features and procedures shall be developed for operating systems and subsystems during the final design to reduce energy consumption.

2.2.7 Environmental Justice

UTA will consider potential impacts to minority, low-income, and disadvantaged populations in the planning and design of its services and infrastructure. Environmental documents will highlight any potential disproportionate impacts to these populations. UTA will engage with environmental justice communities, specifically to inform and consult, through public outreach initiatives.

2.2.8 Geology and Soils

UTA's service area is seismically active; and the structures are assigned a Seismic Performance Category D in accordance with the American Association of State Highway and Transportation Officials (AASHTO) requirements. This is based on a system of categories A through D with D being the most severe. Unless one has already been prepared by the local jurisdiction, a geotechnical report shall be prepared.

2.2.9 Hazardous Materials

As defined in federal and state statutes, hazardous substances, hazardous wastes, and special wastes are regulated in all aspects, from their generation, storage, transport, and disposal, including associated reporting and

record keeping. In the development and implementation of projects, UTA shall consider hazardous substances, hazardous wastes, and special wastes and shall comply with all applicable regulations and controls.

Due care shall be exercised to determine whether hazardous substances, hazardous wastes, or special wastes may be present on, adjacent, or in close proximity to property being considered for use in UTA projects. A property may be impacted by such substances or wastes that are located within the property boundaries as well as migration to the property from off-site sources. The presence of hazardous substances, hazardous wastes, or special wastes may impact all aspects of a project, including property acquisition and project construction.

For properties being considered for acquisition, a "due diligence" Phase I Environmental Site Assessment (ESA) or Property Transaction Screens (PTS) shall be conducted to determine the presence of such substances or wastes in accordance with the current edition of the American Society for Testing and Material (ASTM) Standard E-1527-21, "Standard Practice for Environmental Site Assessments: Phase I Environmental Site Assessment Process." The Phase I ESA or PTS shall be conducted prior to acquisition. Acquisition of an interest in a property determined to contain such substances shall be avoided unless the risks and liabilities of such acquisition can be justified. If avoidance is not feasible, proper management of substances and wastes shall conform to all applicable laws and regulations.

For properties where acquisition is not a factor, a Phase I ESA or PTS shall be conducted to identify potential construction-related impacts associated with such substances and wastes. The Phase I ESA shall use the ASTM Phase I ESA standards as a guideline to determine the appropriate level of environmental inquiry necessary to identify and evaluate project specific construction impacts.

Once construction impacts have been identified, proper management of substances and wastes encountered during construction shall conform to all applicable laws and regulations and coordinated with UTA environmental staff.

2.2.10 Historic, Architectural, Archaeological, and Cultural Resources

Section 106 of the National Historic Preservation Act (NHPA) requires that federal agencies, or state agencies that receive federal assistance, consider any effects a project may have on significant cultural resources. In addition, Section 9-8-404 of the Utah Code Annotated (UCA) requires that state agencies "take into account" how their activities will affect historic properties. As part of the environmental study for the project, all historic resources located within the project's area of potential effect (APE) that are on or eligible for the National Register of Historic Places (NRHP) will be identified, and consultation with the State Historic Preservation Office (SHPO) will be

completed to determine the effect of the project on those resources. For projects that will have an Adverse Effect on eligible historic resources, a Memorandum of Agreement (MOA) will be developed that identifies the mitigation measures that will be incorporated into the project. For federally funded projects, FTA will also be a party to the MOA.

UCA 63-73-19 protects significant paleontological resources included in or eligible for inclusion in the State Paleontological Register. This regulation requires that state agencies take into account the effect of the project on paleontological resources and allow the director of the Utah Geological Survey (UGS) an opportunity to comment. If the project would have No Effect on paleontological resources, no further action is necessary. If there may be an effect on paleontological resources, documentation and surveys may be required.

2.2.10.1 Summary of MOA Stipulations

Where sites or properties are identified as eligible for the NRHP and are adversely impacted by the project, UTA will consult with SHPO to develop an appropriate mitigation plan, which will be documented in the MOA. Types of mitigation include but are not necessarily limited to:

- Historic Structures: Mitigation for adverse effects on historic structures may consist of intensive-level survey documentation. A qualified architectural historian who meets the Secretary of the Interior's standards for historian or architectural historian shall conduct the fieldwork, research, and formal documentation of each building in accordance with the SHPO's Intensive Level Survey–Basic Survey Standards (Utah State Historic Preservation Office 2007b).
- Historic American Engineering Record Documentation: A qualified historian or archaeologist who meets the Secretary of the Interior's standards for historian or historical archaeologist shall conduct the fieldwork, research, and formal documentation of the resource. This shall be in accordance with the Secretary of the Interior's Standards and Guidelines for Architectural and Engineering Documentation, consisting of historical research, measured drawings, and large-format black-and-white photography.
- Data Recovery Plans: In consultation with the SHPO, UTA will develop data recovery plans for archaeological sites where it is determined that this treatment will be the most appropriate and effective, considering the design requirements of the project. Plans will be consistent with the Secretary of the Interior's Standards and Guidelines for Archaeological Documentation.
- Preservation in Place: In consultation with the SHPO, UTA will develop plans for preservation in place for archaeological sites where it has been determined that this treatment will be the most appropriate and effective, considering the design requirements of the project. UTA will implement approved preservation

plans to ensure that the archaeological properties selected for such treatment are preserved during construction.

- Educational Component: The project may include an educational component as mitigation for impacts to archaeological sites. The format of the educational component will be developed by UTA in consultation with the SHPO. The educational materials produced could be in the form of a popular report suitable for distribution to the public, presenting the results of the archaeological investigations, or as display boards mounted in the trains.

2.2.10.2 Inadvertent Discovery

If buried cultural or unanticipated archaeological resources are inadvertently discovered during ground-disturbing activities, the contractor will contact a qualified archaeologist. In consultation with UTA and the SHPO, the archaeologist will determine the appropriate action regarding the resource. Work will not resume in the affected area until the UTA Project Manager, in consultation with UTA environmental staff and the SHPO, gives approval.

Buried human remains that were not identified during research or field surveys could be inadvertently unearthed during excavation activities, which could result in damage to the human remains. If human remains of Native American origin are discovered during ground-disturbing activities, it is necessary to comply with state laws relating to the disposition of Native American burials, following state regulation UCA 9-9-401 and the Utah Native American Graves Protection and Repatriation Act of1992.

Utah State Code (63-73-11 through 63-73-19) currently states that paleontological resources are important and require the preservation of critical fossil resources on State lands. If paleontological resources are unearthed before or during construction, a qualified paleontologist should be notified. The paleontologist then will salvage the fossils and assess the necessity for further mitigation measures, if applicable.

2.2.11 Traffic

Impacts to traffic and parking will be considered in the environmental document.

2.2.12 Transit Noise and Vibration

This section presents the noise and vibration design criteria applicable to the operation of vehicles, noise from transit support facilities, and noise attributable to construction of the system, and describes the methods to be employed to mitigate noise impacts. The primary goal is to minimize the adverse noise and vibration impacts on the

community and, where necessary and appropriate, to provide feasible and reasonable noise and vibration mitigation measures.

2.2.12.1 Project Noise and Vibration

Where conducting an environmental study for a proposed Capital Development project, UTA will assess the potential for noise and vibration impacts from the proposed project in accordance with FTA's guidance document *Transit Noise and Vibration Impact Assessment* (September 2018), and according to the UTA Noise Assessment and Mitigation Procedures. The findings will be documented in a noise and vibration study report and/or the project's environmental document.

The noise and vibration study will identify sensitive receivers that will have moderate or severe noise and/or vibration impacts from the proposed action, and mitigation measures will be developed for those receivers where reasonable and feasible. Mitigation commitments will be specified in the environmental document and may include measures such as construction of sound barriers (such as walls or berms) between the receiver and the noise source and building noise insulation.

2.2.12.2 Construction Noise and Vibration

Construction noise is regulated by local ordinances and by U.S. Environmental Protection Agency emission standards for construction equipment. Construction contractors will be contractually required to meet all federal, state, and local noise requirements and ordinances. Noise mitigation measures will be implemented in accordance with the mitigation requirements contained in the environmental document.

2.2.12.3 Horn Noise

Quiet zones may be employed to eliminate horn use and noise except in emergencies. Quiet zones will be established in coordination with the Utah Department of Transportation, affected cities, and the Federal Railroad Administration. Affected cities have the responsibility to apply for quiet zones. UTA cannot apply for or establish quiet zones–they shall be established by the local municipality in accordance with the FRA requirements–but UTA is committed to work with the local communities to help them obtain quiet zone status.

2.2.12.4 Yard and Shop Noise

The noise levels from yard and shop activities generally will satisfy the daytime noise criteria at most of the residential sites near the yard site. UTA will ensure that noise-producing yard activities will be limited to daytime

hours to the extent possible. Nighttime yard activities, other than trains moving in the yard, will be performed inside a closed building, which is the normal practice in maintenance yards.

2.2.12.5 Grade Crossing Warning Bell Noise

As stipulated in Chapters 10 and 13 of this Design Criteria Manual, highway grade crossings shall utilize an audible warning device, or bell. This could include a blank-out sign with an audible bell for warning of an approaching train. To help shield the surrounding residences and other noise receptors from the bell noise, the bell should be field adjusted, and be mounted at the top of the mast. The bell shall have a minimum sound level of 75 dB at 10 feet.

2.2.13 Safety/Security

The implementation of a transit system carries with it the potential for crimes against persons and property, extending to vehicles, stations, parking areas, and other public areas created by the system. In order to minimize this potential, all system public areas shall be designed to promote maximum safety and security for all system patrons. Specific design measures, which shall be employed, are discussed in the design criteria for the specific system element.

2.2.14 Section 4(f) Requirements

Section 4(f) of the Department of Transportation Act of 1996, as amended (49 USC § 303), protects historic, cultural, public parks, and wildlife refuges from conversion to transportation use unless it can be demonstrated that there is no prudent or feasible alternative. For all projects with a federal nexus, a 4(f) evaluation will be conducted, documenting the reasons for the use of land, the benefits associated with that use, and the lack of prudent or feasible alternatives for avoiding the resource.

2.2.15 Visual

The project may affect visual quality. These impacts may result from removal of existing vegetation and from construction of station or parking lot infrastructure adjacent to residential areas or historic resources. Visual impacts to historic resources may require consultation with SHPO and potential design changes.

Design standards for the visual characteristics of stations will be developed in consultation with local jurisdictions through the design review process.

2.2.16 Water Resources

2.2.16.1 Surface Water Quality

The addition of new fixed facilities may increase the potential for water runoff. This potential extends to both the construction and operation phases of a project. A Utah Pollutant Discharge Elimination System (UPDES) stormwater permit shall be obtained by the contractor from the Utah Division of Water Quality prior to the start of construction. As part of this permit, the contractor will develop a Storm Water Pollution Prevention Plan (SWPPP). The SWPPP will include sedimentation and erosion control best management practices (BMPs) for the elimination or reduction of sediment during construction. Methods that may be employed during construction include silt fences, temporary seeding, temporary diversions, sediment traps, and temporary stream crossings. The SWPPP will also include measures for spill prevention, containment, and an emergency cleanup plan. Any required permits from the local stormwater management authority shall also be obtained prior to the start of construction.

Catch basins, curbing, culverts, gutters, and storm sewers shall be constructed, as necessary, for the permanent control of water runoff during the operation phase of the project. No stormwater runoff resulting from the project shall be permitted to enter canals, in compliance with applicable local requirements.

2.2.16.2 Streams

Any required stream alteration permits shall be obtained from the Utah State Engineer's office. The permit applications will be reviewed as required by the U.S. Army Corps of Engineers.

2.2.16.3 Floodplains

Construction of the project has the potential to impact regulatory floodways and floodplains within the corridor. Local county flood control and Federal Emergency Management Agency (FEMA) guidelines shall be observed for the design of the permanent structures and construction activities. Disturbances to creek channels should be avoided.

Construction in designated floodplains will require a Section 404 permit from the U.S. Army Corps of Engineers. Construction impacts shall be addressed to mitigate potential water quality and flooding problems.

2.2.16.4 Wetlands

Wetlands within or adjacent to the project right-of-way will be delineated in the project's environmental studies. The type and extent of the disturbance shall be coordinated with the U.S. Army Corps of Engineers. Replacement wetlands shall be provided as part of the project if required by the permit requirements and in accordance with applicable laws and regulations.

Construction activity shall have a short-term disruption effect, and portions of these wetlands could be displaced. The proposed mitigation is to minimize disturbance to these areas, and where direct impacts occur, to restore the wetlands to as near the original condition as possible, or as prescribed by the Army Corps of Engineers.

END OF CHAPTER 2.

DESIGN CRITERIA MANUAL

/ CHAPTER 3

RUNNING WAY AND TRACK ALIGNMENT

Table of Contents

CHAPTER 3 RUNNING WAY AND TRACK ALIGNMENT 1

3.1 INTRODUCTION 1
3.2 BRT RUNNING WAYS 1
3.2.1 BRT Running Ways – General 1
3.2.2 Types of BRT Running Ways 2
3.2.3 Other BRT Design Considerations 6
3.2.4 Pavement Design 6
3.2.5 Design Vehicle 7
3.2.6 Access by Non-Bus Traffic and Pedestrian Access 7
3.3 COMMUTER RAIL TRACK ALIGNMENT 8
3.3.1 Design Speed 8
3.3.2 Track Center Spacing 9
3.3.3 Clearances - General 9
3.3.4 Horizontal Alignment 9
3.3.5 Vertical Alignments 17
3.4 LIGHT RAIL TRANSIT (LRT) TRACK ALIGNMENT 19
3.4.1 General 19
3.4.2 Design Speed 20
3.4.3 Semi-Exclusive LRT Track in Dedicated Right-of-Way Alignment Criteria 20
3.4.4 Semi-Exclusive Joint Use LRT/Freight Track Alignment Criteria 28
3.4.5 LRT Track in Existing Streets Alignment Criteria 31
3.4.6 LRT Lead and Yard Track and Freight Industrial Track Alignment Criteria 33
3.4.7 Clearances 35
3.5 STREETCAR TRACK ALIGNMENT CRITERIA 48
3.5.1 Horizontal Alignment 49
3.5.2 Vertical Alignment 52
3.5.3 Clearances 53

CHAPTER 3 RUNNING WAY AND TRACK ALIGNMENT

3.1 Introduction

The UTA employs several modes of dedicated right of way and fixed guideway technologies for transportation including Bus Rapid Transit (BRT), Commuter Rail (CRT), Light Rail (LRT) and Streetcar Systems. The operating right of way may be dedicated only during certain time periods, locations, or direction of travel. There are different running way and track alignment standards depending on the mode. This Chapter details design standards for BRT, CRT, LRT, and Streetcar with specifics of each mode detailed in separate sections below.

3.2 BRT Running Ways

3.2.1 BRT Running Ways – General

A running way is the portion of the roadway that buses utilize for operations. Running ways can be shared with general traffic or separated from general traffic. This section establishes the basic criteria to be used for BRT running way design. Most BRT projects will utilize UDOT, city, or county owned roadways. The most effective BRT routes maximize the distance and time buses can operate in dedicated lanes. Roadway and bus running way design in such public rights-of-way shall be in conformance with the standards and criteria of the governing agency owning the roadway.

3.2.2 Types of BRT Running Ways

Running way types vary in the degree of lateral and grade separation from general automobile traffic. UTA has defined four types of BRT running ways based upon these degrees of separation. These running way types are:

Table 3-1: BRT Running Way Type

Type	Description
Type I BRT: Mixed flow lanes for buses	BRT system shares lanes with general automobile traffic, similar to a local bus route.
Type II BRT: Dedicated lanes for buses	BRT running way has dedicated lanes for bus traffic, restricted from other vehicles.
Type III BRT: Physically separated bus lanes	Bus lanes are separated from traffic lanes by a curb or physical barrier.
Type IV BRT: Separated bus corridor alignment	BRT system consists of a separate roadway or guideway in its own alignment and corridor.

3.2.2.1 Type I BRT: Mixed Flow Lanes for Buses

Mixed flow lanes, where the BRT system shares lanes with general automobile traffic similar to a local bus route, represent the most basic form of a BRT running way. Refer to Figure 3-1 for further illustration.

Figure 3-1: Type I BRT Mixed Flow Lanes for Buses

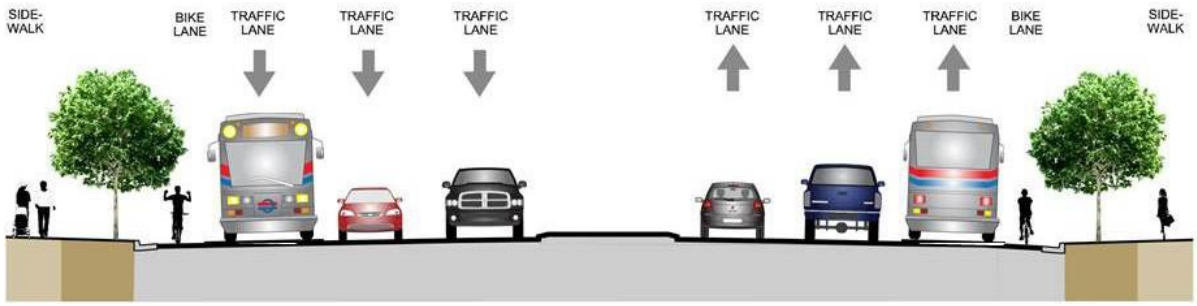

3.2.2.2 Type II BRT: Dedicated Lanes for Buses

As illustrated in Figures 3-2a and 3-2b, a Type II BRT running way features dedicated lanes for bus traffic, with other vehicles restricted from using the BRT lanes. The exclusive lane can be positioned either at the center of the roadway, or along the outside of the roadway (side running). No physical barrier (e.g., a curb) is used in a Type II BRT system. The running way shall be delineated by signage and a combination of pavement markings, a rumble strip, raised lane delineators, and/or alternate pavement color. Bus lanes shall be 12 feet wide with a 2-foot buffer separating the bus lane from the general-purpose vehicle lanes.

Pavement markings for Type II BRT lanes shall comply with the guidelines described in Chapter 3D Markings for Preferential Lanes of the Utah MUTCD. Pavement markings should reference the latest national MUTCD edition and be considered on a project basis.

Figure 3-2a: Type II BRT Dedicated Bus Lanes – Center Running

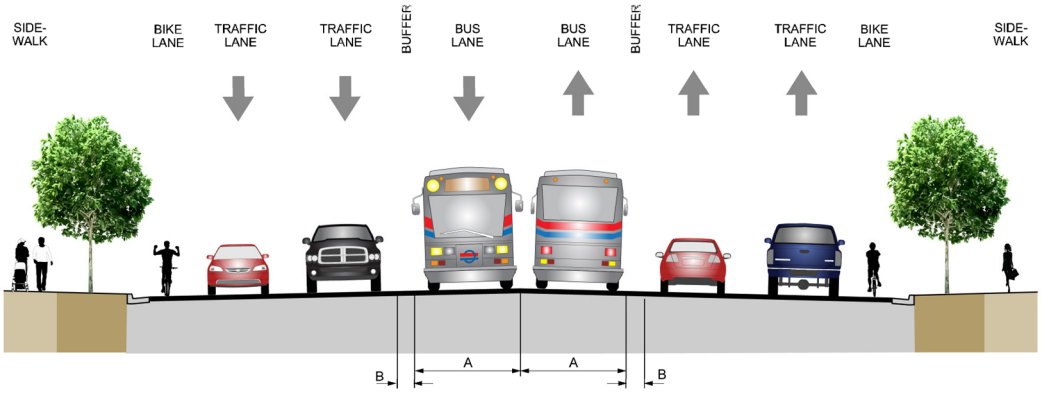

TYPE II BRT DEDICATED BUS LANES - CENTER RUNNING

DESIGNATION	DESCRIPTION	DIMENSION (FEET) PREFERRED	DIMENSION (FEET) MINIMUM*	NOTES
A	BRT LANE	12	11	
B	BUFFER	2	0	

*USE OF MINIMUM REQUIRES DESIGN EXCEPTION

Figure 3-2b: Type II BRT Dedicated Bus Lanes – Side Running

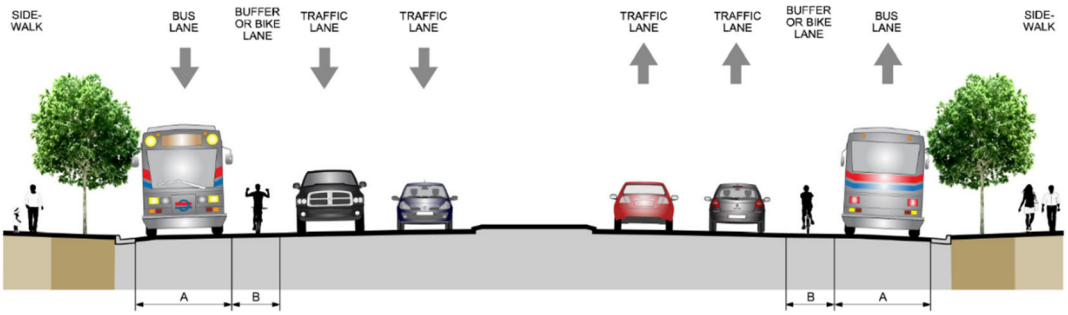

TYPE II BRT DEDICATED BUS LANES - SIDE RUNNING

DESIGNATION	DESCRIPTION	DIMENSION (FEET) PREFERRED	DIMENSION (FEET) MINIMUM*	NOTES
A	BRT LANE	12	11	
B	BUFFER	2	0	
	BIKE LANE	5	4	CONSULT LOCAL JURISDICTIONAL STANDARDS

*USE OF MINIMUM REQUIRES DESIGN EXCEPTION

3.2.2.3 Type III BRT: Physically Separated Bus Lanes

A Type III BRT running way is similar to the Type II, except that the bus lanes are separated from the traffic lanes by a curb or physical barrier in compliance with state or local roadway jurisdiction standards. Bus lanes shall be 12 feet wide with a 4-foot shy distance to the face of curb or barrier. The design speed of the running way shall match the design speed of the roadway. Figure 3-3 illustrates a Type III running way.

Pavement markings for Type III BRT lanes shall comply with the guidelines described in Chapter 3D Markings for Preferential Lanes of the Utah MUTCD.

Figure 3-3: Type III BRT Physically Separated Bus Lanes

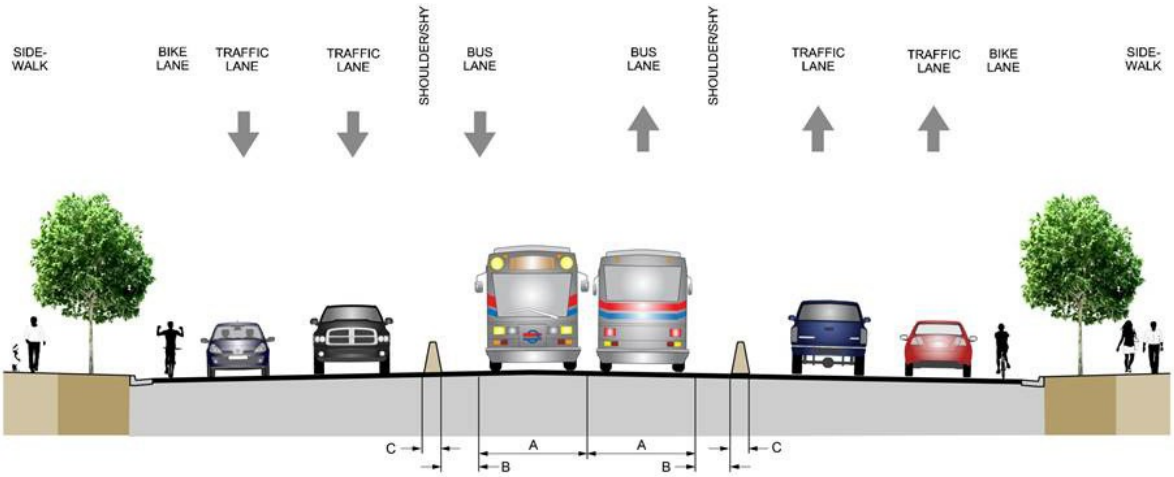

TYPE III BRT DEDICATED BUS LANES - CENTER RUNNING

DESIGNATION	DESCRIPTION	DIMENSION (FEET) PREFERRED	DIMENSION (FEET) MINIMUM*	NOTES
A	BRT LANE	12	11	
B	SHOULDER/SHY	4	2	
C	BARRIER/CURB	2	0.83	

*USE OF MINIMUM REQUIRES DESIGN EXCEPTION

3.2.2.4 Type IV BRT: Separate Bus Corridor Alignment

A Type IV running way represents the most developed form of a busway and consists of a separate roadway or guideway constructed in its own alignment and corridor. It can include grade-separated intersections and those built at-grade. A Type IV running way is conceptually shown in Figure 3-4.

Figure 3-4: Type IV BRT Separate Bus Corridor Alignment

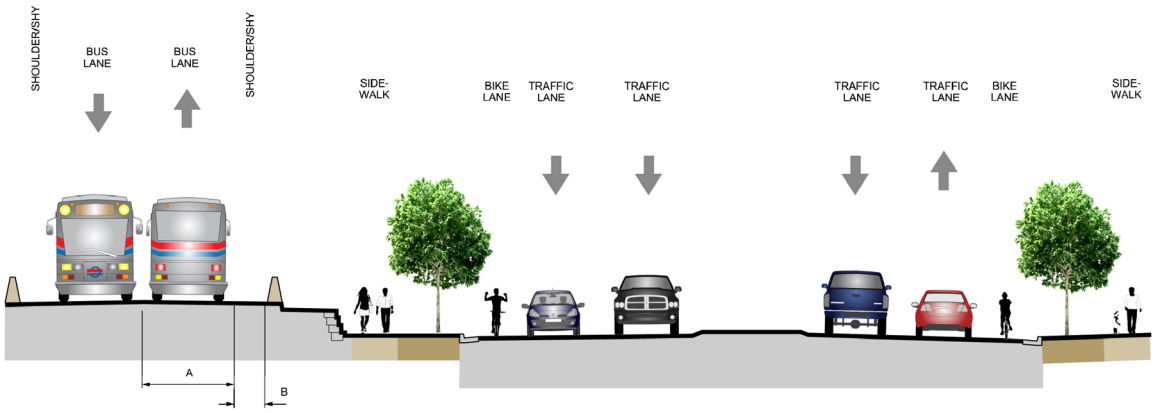

TYPE IV BRT - SEPARATE BUS CORRIDOR ALIGNMENT

DESIGNATION	DESCRIPTION	DIMENSION (FEET) PREFERRED	DIMENSION (FEET) MINIMUM*	NOTES
A	BRT LANE	12	11	
B	BUFFER	4	2	

*USE OF MINIMUM REQUIRES DESIGN EXCEPTION

3.2.3 Other BRT Design Considerations

The geometry of the running way influences passenger comfort, especially for those who are standing. Abrupt changes in horizontal alignment shall be avoided as much as practicable. The geometry of the running way shall meet current AASHTO guidelines. The design speed should be chosen to match those of major comparable thoroughfares. Bus lanes shall be 12 feet wide with 4-foot shoulders/shy distance.

3.2.4 Pavement Design

BRT Type II, III, and IV pavement design shall refer to Chapter 5, Section 5.3.9. Intersection-specific running way improvements may also include bus bypass lanes and queue jumps.

Similar to a Type I system, intersection-specific running way improvements may also include bus bypass lanes and queue jumps.

Table 3-2: Typical Bus Weights and Gross Vehicle Weights

Bus Type	Bus Weight		Gross Vehicle Weight	
	lbs	kg	lbs	kg
40 ft (12 m)				
Diesel	27,500	12,500	39,600	18,000
CNG	29,000	13,100	39,600	18,000
Diesel-electric	30,800	14,000	39,600	18,000
Battery-electric	35,400	16,100	48,200	18,000
60 ft (18 m)				
Diesel	41,500	18,800	63,900	29,000

Pavement design is directly influenced by the anticipated number of heavy axle loadings. Typically, the rear axle on a two-axle vehicle will carry approximately 70% of the gross vehicle weight.

The design period of 20 years for flexible pavements and 40 years for rigid pavements shall be used. Where comparing pavement structures, a life-cycle cost analysis is required to produce an equitable comparison. Refer to Chapter 5, Section 5.3.9 for more details.

3.2.5 Design Vehicle

All geometry and turning movements of the busways shall accommodate an AASHTO BUS-45 design vehicle. Intersection radii for general-purpose lanes shall accommodate the design vehicle as determined by the criteria and standards defined by the jurisdictional agency owning the roadway.

3.2.6 Access by Non-Bus Traffic and Pedestrian Access

Separate busways, while offering advantages due to restricted access and the ability to travel at higher speeds, also carry the added responsibility of limiting access for pedestrians, bicycles, and vehicular traffic.

Where the busway is located in its own corridor (Type IV), a fence or other barrier should be provided throughout the length of the busway for safety, pedestrian control, and to prevent trash dumping.

Engineering judgment may dictate exceptions in areas of precipitous slopes or other natural barriers to access or in park-like areas. “No Trespassing” signs shall be mounted on the fence or barrier at appropriate intervals.

Where pedestrian crossings are required, it is recommended that they be at signalized crossing locations to avoid conflicts with buses.

3.2.6.1 Vehicular Traffic Access

While access by vehicles other than buses is discouraged in the running way, provisions may be made for emergency vehicle access through special access points. The location of these special access points shall be coordinated with the local municipality providing emergency services. In the case of a Type III running way, emergency vehicle access points on each side of the running way shall be staggered to discourage unauthorized vehicles turning across the bus right-of-way.

3.3 Commuter Rail Track Alignment

Stationing shall be continuous along the length of the main track. Horizontal and vertical geometry shall be developed for all tracks. Horizontal alignments shall be at the centerline between the rails. Vertical alignments may be projected from the mainline alignment. Independent vertical alignments will be created for special situations where the vertical alignment needs to vary from the mainline. Stationing shall be continuous along the length of the main track and stationed along the arc in curves. Wayside features shall typically be located by stations and be offset from the main track.

3.3.1 Design Speed

Design speeds shall be based on the following desirable (where possible) maximum operating speeds:

Table 3-3: CRT Maximum Operating Speeds

Location	Maximum Operating Speed (mph)
Main Track	79
Yard Track	10

3.3.2 Track Center Spacing

The minimum track centerline separation between UTA main track and adjacent Union Pacific Railroad (UPRR) main tracks shall be 25 feet, except as expressly agreed by UPRR and UTA. The UP/UTA agreement identifies a number of locations where 25 feet cannot practically be provided, and additional locations may also be identified, which will be subject to detailed consideration by both parties. The minimum spacing between the centerlines of any adjacent UTA tracks shall be 15 feet. The minimum spacing between UTA tracks and UPRR non-main tracks shall be 25 feet where possible, but 15 feet minimum as expressly agreed by UPRR and UTA. At center platform stations, the UTA track centers shall be 33 feet to allow for a center platform.

3.3.3 Clearances - General

Overhead/Vertical Clearances: The minimum overhead clearance measured from the top of rail to the lowest point on the overhead structure shall be 23 feet 6 inches.

Horizontal/Side Clearances: Side clearances shall conform to Chapter 28 of the AREMA Manual (latest revision). The required clearances shall follow the General Outline as presented in Figure 28-1-1 of the AREMA Manual (latest revision).

The minimum clearances shall adhere to the specifications in AREMA Figures 28-2-3 through 28-2-4.

Access to the track from adjacent roadways shall be provided at strategic locations for both rubber-tired emergency vehicles and for UTA maintenance-of-way vehicles including “hi-rail” vehicles with flanged wheels for driving on the track. Where practicable, the access point will provide a turn-around.

3.3.4 Horizontal Alignment

The horizontal alignment of mainline tracks shall consist of a series of tangents joined to circular curves, usually by means of spiral transition curves. The nomenclature and calculations used to define horizontal alignments are per AREMA (latest revision).

Careful consideration shall be given during the design development to the location of the tracks relative to bicycle lanes and crossings and the safe crossing of the tracks by bicyclist.

3.3.4.1 Tangent Alignment

3.3.4.1.1 Mainlines

The minimum length of a tangent track, between curved tracks, for mainline, shall be 200 feet or three times the design speed (in mph), whichever is greater.

For adjacent curves in the same direction that cannot be replaced by a single simple curve due to geometric constraints, an alignment containing a series of compound curves and/or spirals is preferred to a series of curves and short tangents.

3.3.4.1.2 Yards

Refer to AREMA Chapter 5 Track, Part 3 Curves, Sec. 3.5.2 for minimum/desired length of tangent track for yard track.

3.3.4.1.3 Stations

At station platforms, the horizontal alignment shall be tangent throughout the length of the platform unless specifically approved by UTA. The tangent shall extend at least 50 feet beyond both ends of the platform.

At terminal stations, tracks shall extend beyond platforms to allow for vehicle storage where possible, subject to UTA approval. If feasible, these tail tracks will be placed on the probable alignment for any future service extensions.

3.3.4.1.4 Special Trackwork

All special trackwork shall be located on horizontal and vertical tangents, unless otherwise approved by UTA. The minimum distance between the start/end of a curve and the point of switch or point of frog and between the points of switch of two turnouts shall be 100 feet.

3.3.4.2 Curve Alignment

3.3.4.2.1 Circular Curves

Circular curves shall be defined by the chord definition and specified by their degree of curvature and radius, in accordance with the following formula:

$$R = 50 / (\sin (Dc/2))$$

Where:

R = Radius (in feet)

Dc = Degree of curvature

The track alignment shall be based on the use of the largest feasible radius, taking into account operating requirements, constructability, right-of-way constraints, and existing adjacent conditions.

Nomenclature for circular curves is illustrated in Figure 3-5.

The preferred maximum degree of circular curve is 10 degrees (with an equivalent minimum radius of 573.69 feet). The absolute maximum degree of circular curve is 12 degrees 30 minutes (with an equivalent minimum radius of 459.28 feet). These values apply for trackage to be operated on by UPRR or other freight railroads. Modifications to trackage serving industries, to be operated by UPRR and/or a freight railroad, may exceed these values, but shall not incorporate curvature of greater severity than that of the original/existing trackage. Increases in degree of curvature may only be used with UTA and freight railroad approval.

The normal minimum circular curve length shall be determined by the following formula:

$$L = 3 V$$

Where:

L = Minimum length of curve (in feet)

V = Design speed through the curve (in mph)

Figure 3-5: Nomenclature for Circular Curves

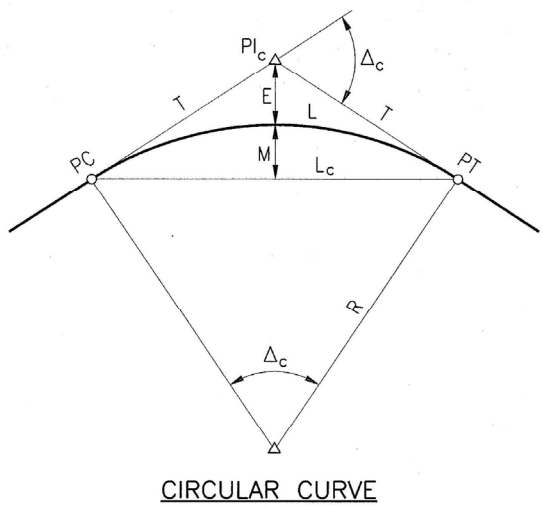

CIRCULAR CURVE FORMULAS

$$D = \frac{5{,}729.57795}{R}$$

$$T = R \text{ TAN } \frac{\Delta_c}{2}$$

$$L = \frac{\Delta_c}{D} \times 100$$

$$L_c = 2 \text{ R SIN } \frac{\Delta_c}{2}$$

$$E = R \text{ SEC } \frac{\Delta_c}{2} - R$$

$$M = R \left(1 - \text{COS } \frac{\Delta_c}{2}\right)$$

3.3.4.2.2 Superelevation

Superelevation is defined as the number of inches the outer (high) rail on a curve is raised above the inner (low) rail. Equilibrium superelevation is the amount of superelevation required so that the resultant force from the center of gravity of the vehicle will be perpendicular to the plane of the two rails and halfway in between them at a given speed. Equilibrium superelevation is defined by radius, using the equation:

$$Eq = Ea + Eu = 4.011\ V^2/R$$

Where:

Eq = Total amount of superelevation required for equilibrium (in inches)

Ea = Actual superelevation (in inches)

Eu = Unbalanced superelevation (in inches)

V = Design speed through the curve (in mph)

R = Radius (in feet)

Superelevation shall be introduced to meet the design speed divided as closely as possible between ⅔ actual and ⅓ unbalance. However, in restricted areas, superelevation may be divided approximately equally in order to

minimize spiral length and maximize design speed. Actual superelevation shall be specified in ¼ inch increments. When the calculated requirement is not a whole number multiple of ¼ inch, the next higher whole number multiple of ¼ inch shall be used. Actual superelevation of less than 1 inch shall not be used. Superelevation should be avoided, if possible, in road crossings.

Maximum superelevation values are:

Ea = 5 inches

Eu = 4 inches maximum (3 inches desirable)

The inside rail of curves shall be designated as the profile rail. Ea shall be attained and removed linearly throughout the full length of the spiral transition curve by raising the outside rail while maintaining the inside rail at the profile grade.

In areas where rail vehicles will frequently operate at lower speeds, actual superelevation, Ea, is a balance between passenger comfort and desired design speed with a maximum actual superelevation of 4 inches.

No superelevation is permitted on yard tracks.

3.3.4.2.3 Spiral Curves

Spiral transition curves shall be used to develop the superelevation of the track and limit lateral acceleration during the horizontal transition of the vehicle as it enters the curve. Spirals shall be provided on all mainline track horizontal curves, except where the calculated value of the throw, P, is less than 0.02 feet. Spirals shall be true clothoid Barnett Spirals as defined by the AREMA Manual for Railway Engineering.

Details of spiral transition curves are shown in Figure 3-6.

The maximum Eu and Ea shall not exceed 4 and 5 inches, respectively. Spiral lengths shall be determined based on the greater of the length as computed for either actual superelevation or the unbalanced superelevation underbalance and speed for each curve and their maximum value determined from the following equations:

(1) $L_s = 1.63\ Eu\ V$ (desirable)

(2) $L_s = 1.22\ Eu\ V$ (minimum)

(3) $L_s = 62\ Ea$ (absolute)

Where:

L_s = Spiral length (in feet)

Spiral lengths shall be determined from the above equations and rounded up to the nearest multiple of 5 feet. Where geometric constraints exist, the equation for minimum spiral length may be used with prior approval of UTA instead of the equation for desirable spiral length providing Eu is the governing superelevation. The normal minimum length shall be 100 feet. In areas where geometric conditions are extremely restricted, the spiral length may be reduced to the absolute minimum of 65 feet, with a corresponding maximum Ea of 1 inch.

Figure 3-6: Details of Spiral Transition Curves

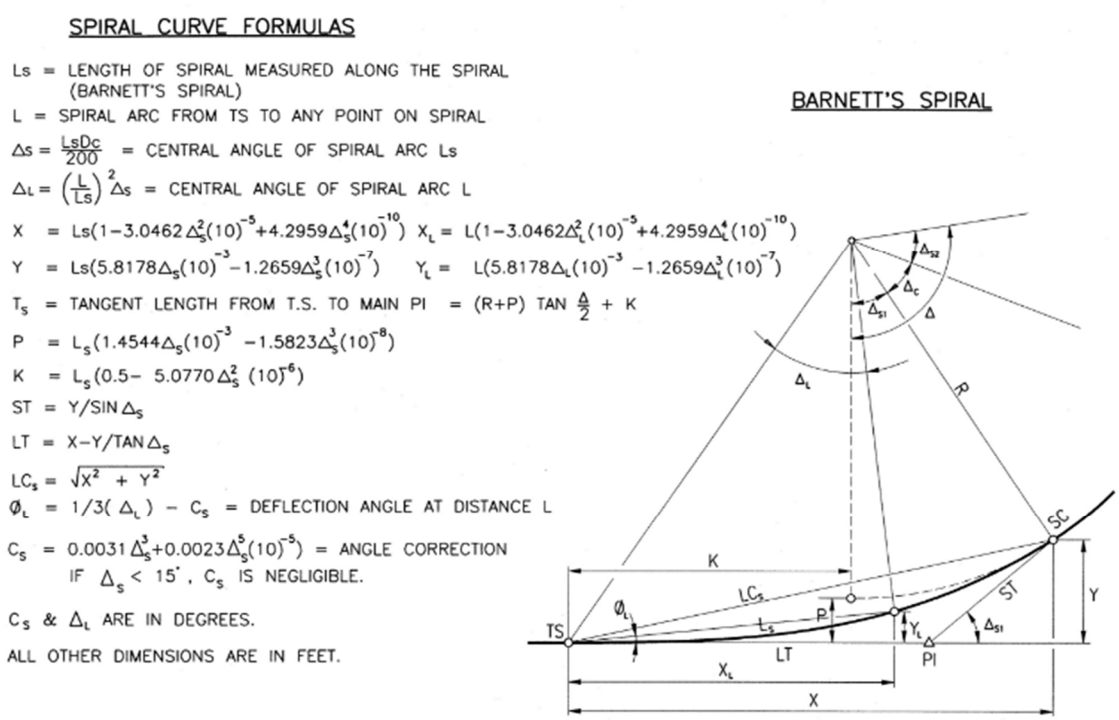

3.3.4.2.4 Compound Circular Curves

Where compound curves are used, they shall be connected by a spiral transition curve. The absolute minimum spiral length shall be the greater of the lengths as determined by the following:

(1) $L_s = 1.63(Eu_2 - Eu_1)\ V$ (desirable)

(2) $L_s = 1.22(Eu_2 - Eu_1)\ V$ (minimum)

(3) $L_s = 62(Ea_2 - Ea_1)$

Where:

L_s = Minimum length of spiral (in feet)
Ea_1 = Actual superelevation of the first circular curve (in inches)
Ea_2 = Actual superelevation of the second circular curve (in inches)
Eu_1 = Unbalanced superelevation of the first circular curve (in inches)
Eu_2 = Unbalanced superelevation of the second circular curve (in inches)
V = Design speed through the circular curves (in mph)

Spiral curves connecting compound curves are not required when both $(Ea_2 - Ea_1)$ and $(Eu_2 - Eu_1)$ are less than 1 inch. For compound circular curves without a spiral, the change in actual superelevation shall be run out entirely within the curve of the larger radius for the largest distance required by the equations for compound circular curves.

The nomenclature for circular curves with spirals is given in Figure 3-7.

Figure 3-7: Nomenclature for Circular Curves with Spirals

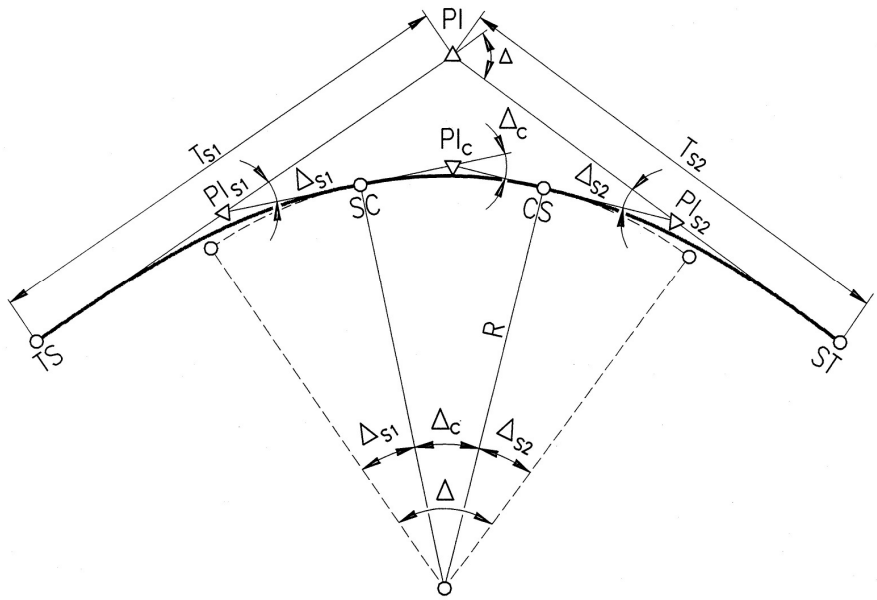

CURVE WITH SPIRAL TRANSITIONS

L_s = LENGTH OF SPIRAL

Dc = DEGREE OF CURVE

R = RADIUS OF CIRCULAR CURVE

Δ = TOTAL INTERSECTION ANGLE CIRCULAR CURVE

Δ_c = CENTRAL ANGLE OF

PC = POINT OF CURVATURE

PI = POINT OF INTERSECTION

PT = POINT OF TANGENCY

TS = TANGENT–TO–SPIRAL

SC = SPIRAL–TO–CURVE

CS = CURVE–TO–SPIRAL

ST = SPIRAL–TO–TANGENT

T = TANGENT LENGTH FROM PC TO PI

L = LENGTH OF CIRCULAR ARC FROM PC TO PT

L_c = LENGTH OF CHORD FROM PC TO PT

E = EXTERNAL DISTANCE

M = MIDDLE ORDINATE DISTANCE

Ea = ACTUAL SUPERELEVATION

Ts = TANGENT LENGTH FROM TS TO PI

3.3.5 Vertical Alignments

The vertical alignment shall consist of constant grade tangent segments connected at their intersection by parabolic curves with a constant rate of change in grade. The nomenclature used to describe vertical alignments shall be consistent with that illustrated in Figure 3-8. The profile grade line in tangent track shall be along the centerline of track between the two running rails and in the plane defined by the top of the two rails. In curved track, the inside rail of the curve shall remain at the profile grade line, with superelevation achieved by raising the outer rail above the inner rail.

For segments with more than one main or passing track, the vertical profile for a single main track shall be defined on the profile drawings. Top of rail elevations for the second parallel UTA mainline track or siding shall be noted to be equal to those of the first track at points opposite, perpendicular, and radially.

Where gradients and lengths of vertical curves on the second track may vary, appropriate information shall be noted on the drawings. The profiles for adjacent tracks need not be identical, but consideration should be given to impacts on constructability and features such as grade crossings where the elevation of adjacent tracks differs.

3.3.5.1 Vertical Tangents

The normal minimum length of constant profile grade between vertical curves shall be 100 feet. The profile at stations shall be on a vertical tangent that extends at least the length of the platform.

The minimum distance between a vertical curve and a point of switch shall be 25 feet. All special track work shall be located entirely on the vertical tangent.

3.3.5.2 Vertical Grades

The following profile grade limitations shall apply:

Table 3-4: CRT Vertical Grade Limitations

Location	Desired Maximum	Absolute Maximum
Mainline and Secondary Trackage	1.50%	2.50% with approval
Stations	0.35%	0.50%
Yard and Storage	0.00%	0.25%

3.3.5.3 Vertical Curves

Changes in grade of more than 0.2% shall be connected by vertical curves. Vertical curves shall be parabolic curves having a constant rate of change in grade.

Compound vertical curves will be permitted provided each curve conforms to the requirements stated previously in this chapter.

Figure 3-8: Vertical Curve

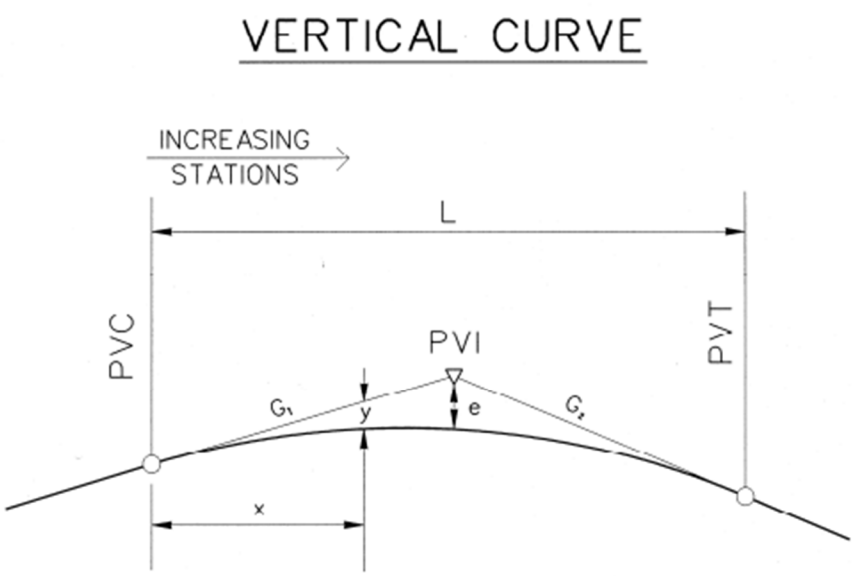

L = LENGTH OF VERTICAL CURVE (LVC) IN FEET
G_1 = GRADE IN (%)
G_2 = GRADE OUT (%)
PVC = POINT OF VERTICAL CURVE
PVT = POINT OF VERTICAL TANGENT
PVI = POINT OF VERTICAL INTERSECTION
e = OFFSET DISTANCE IN FEET
r = RATE OF CHANGE

$$e = \frac{ELEV_{PVI} - 1/2(ELEV_{PVC} + ELEV_{PVT})}{2}$$

$$r = \frac{100(G_1 - G_2)}{L}$$

$$y = 4e\left(\frac{x^2}{L^2}\right)$$

3.3.5.4 Vertical Curve Lengths

The minimum length of a vertical curve, using the proposed equations, shall be 100 feet or that length calculated from the proposed equations, whichever is greater.

The length of vertical curves shall be determined as follows:

For Passenger:

$$L = (D \times V^2 \times 2.15) / 0.6$$

Where:

L = length of vertical curve (in feet)
V = speed of train (in mph)
D = absolute value of the difference in rates of grades expressed in a decimal
2.15 = constant conversion factor

3.4 Light Rail Transit (LRT) Track Alignment

3.4.1 General

The Manual on Uniform Traffic Control Devices (MUTCD) categorizes LRT alignments into three types:

- Exclusive: LRT right-of-way that is grade separated or protected by a fence or traffic barrier. Motor vehicles, pedestrians, and bicycles are prohibited within the right-of-way. Subways and aerials structures are included within this group.
- Semi-exclusive: LRT alignment that is in a separate right-of-way or along a street or railroad right-of-way where motor vehicles, pedestrians, and bicycles have limited access and cross at designated locations only.
- Mixed-use: an alignment where LRT operates in mixed traffic with all types of road users. This includes streets, transit malls, and pedestrian malls where the right-of-way is shared.

UTA light-rail transit has three classifications of track, which are based on the MUTCD definitions:

- Semi-exclusive LRT track in dedicated right-of-way

- Semi-exclusive joint use LRV/freight track in dedicated right-of-way
- Mixed-use LRT track in existing streets (median running in a semi-exclusive alignment, or in existing streets in mixed traffic)

Each classification of track will be designed according to the design criteria for its classification as outlined in this Chapter.

Access to the track from adjacent roadways shall be provided at strategic locations for both rubber-tired emergency vehicles and for UTA maintenance-of-way vehicles including "hi-rail" vehicles with flanged wheels for driving on the track. Where practicable, the access point shall provide a turn-around.

3.4.2 Design Speed

The maximum design speed for LRT is 65 mph.

3.4.3 Semi-Exclusive LRT Track in Dedicated Right-of-Way Alignment Criteria

The horizontal alignment for the LRT track in dedicated right-of-way shall consist of tangents, circular curves, and transition spirals, and shall be designed for a maximum design speed, determined by station spacing, where right-of-way and operational constraints permit.

The track alignment shall be based on a maximum civil speed for each curve, with the actual superelevation to be established based on the maximum operational running speed that is less than or equal to the civil speed. This is to ensure that the curve's actual superelevation (E_a) is not greater than the equilibrium superelevation (E_q) that results during regular everyday operation at more moderate speeds. Each track in a double track system shall have a separate horizontal alignment/control line. The horizontal alignment/control line shall be situated at the centerline between the two rails of the track.

At-grade crossings shall be designed with careful consideration of the track alignment relative to bicycle lanes and shared-use paths. Track geometry and crossing angles shall be evaluated to promote the safe crossing of the tracks by bicyclists.

3.4.3.1 Track Center Spacing

The minimum centerline to centerline distance between two tracks shall be 14 feet where there are center OCS poles. Additional distance may be required where the tracks are curved or superelevated. With prior approval from

UTA, minimum centerline to centerline track spacing may be reduced if side-mounted OCS poles are to be utilized rather than center mounted poles.

3.4.3.2 Horizontal Alignment and Design Speed

3.4.3.2.1 Tangents

The following minimum tangent lengths between circular curves or spiral transitions shall be observed:

T(min.) = 3V or 30 feet, whichever is greater.

Where:

V = design speed (in mph)

At station platforms, use the following minimum tangent lengths (platform shall accommodate a four-car train, or a minimum of 355 feet long):

(Minimum tangent length at platform)* = (length of platform) + (45 feet at each end)
= (length of platform) + (90 feet)

** If the minimum tangent length at platform is not attainable, the clearances between the platform and the Light Rail Vehicle (LRV) middle ordinate and end overhang shall be checked to provide the minimum required clearance between the LRV and the platform structure as defined in the vehicle clearance section.*

For curves in the same direction with a connecting tangent less than 60 feet, connect the adjoining curves with spiral transition to replace the resulting broken back curve configuration.

All turnouts shall be located on tangent track. Points of switches shall be located a minimum of 45 feet from the ends of station platforms. Points of switches and frog heels shall be located a minimum distance of 60 feet from points of horizontal curvature of mainline track.

3.4.3.2.2 Special Trackwork

Special trackwork may not be located within 250 feet of a transition between track types without approval of UTA. The minimum length of horizontal tangent track between any point of switch and the end of the ultimate four-car station platform shall be:

- 60 feet for exclusive LRT track
- 60 feet for combined LRT/freight traffic

The horizontal and vertical alignment adjacent to special trackwork shall conform to the separation distances required between points of intersection of various combinations and directions of turnouts and curves as shown in Table 3.5.

Table 3-5: Minimum Distances from Turnout P.I. to the Beginning of Horizontal or Vertical Curves

Facing End (Switch Points)			Trailing End (Frog)		
Turnout Number	Desirable Minimum (feet)	Absolute Minimum (feet)	Desirable Minimum (feet)	Absolute Minimum	
				Horizontal (feet)	Vertical (feet)
6	97	32	103	38	50
8	108	43	113	48	64
10	110	44	122	59	80
15	119	55	146	88	120
20	141	74	169	116	160

Tangent distances between turnout point of intersection (P.I.) and the beginning of horizontal or vertical curve were developed based on the following criteria:

- Desirable distances are obtained by locating the beginning of horizontal or vertical curves at a point that is 75 feet from point of switch or point of frog.
- Absolute minimum distances are obtained by locating the beginning of horizontal or vertical curves 10 feet ahead of the point of switch. Non-superelevated horizontal curves begin beyond the furthest end of the joint bars connecting the running rail to the heel of frog. Vertical curves and superelevated horizontal curves shall not begin until the last long tie of the turnout set on the frog end.

3.4.3.2.3 Circular Curves

Circular curves shall be defined by the centerline of track radius measured in feet.

Degree of curvature, where required for calculation purposes, shall be defined by the arc definition of curvature as determined by the following formula:

$$D_C = 5729.58 \text{ feet} / R$$

The minimum radius for mainline track shall be determined by the radius necessary to attain the maximum civil speed, taking into account the allowable equilibrium superelevation and corridor constraints. For any given curve, the corresponding equilibrium superelevation shall be such that it results in lateral acceleration of 0.10g or less, where 'g' represents the acceleration due to gravity.

The length of the circular curve, not including connecting spirals, shall be as follows:

Minimum L = 3*V or 60 feet, whichever is greater.

Where:

V = design speed (in mph)

3.4.3.2.4 Spiral Transitions

The minimum length of spiral can be defined by the formula:

L_S (min.) = 31*Ea

For a spiral segment in-between two circular curve segments:

L_S (min.) = 31*(Ea_2 – Ea_1)

Spiral transitions shall be used at all mainline curves of radii of less than 10,000 feet (where possible) This transition is required to eliminate the abrupt change in direction of the vehicle wheel path from tangent track to curved track, to provide a smooth transition for the rate of change of applied superelevation, and to provide a comfortable transition for the rate of change of lateral acceleration.

Transition spirals shall be true clothoid spirals where the instantaneous radius varies directly with the distance from the point of tangency.

The minimum length of transition spiral shall be the largest length as determined by the following formulas:

(1) L_S = 31*Ea (track twist)
(2) L_S = 1.17*Ea*V (vehicle roll limited to 1.2 degrees per second)
(3) L_S = 1.22*Eu*V (jerk rate less than or equal to 0.04 g/sec)
(4) L_S = 60 feet (absolute minimum)

Where:

L_S = Minimum length of transition spiral (in feet)
Ea = Actual superelevation (in inches)
V = Design speed (in mph)
Eu = Unbalanced superelevation (in inches)
Twist = Rate of change of cross level of track due to applied superelevation
Jerk rate = Rate of change of lateral acceleration

If a jerk rate less than 0.04 g/sec cannot be maintained to achieve a desirable design speed, the designer may, with written UTA approval, increase the jerk rate up to a maximum of 0.16 g/sec.

Where compound curves are used, the minimum length of connecting transition spiral shall be the largest length as determined by the following formulas:

(1) $L_S = 1.17^*(Ea_1 - Ea_2)^*V$

(2) $L_S = 1.22^*(Eu_1 - Eu_2)^*V$

(3) $L_S = 31^*(Ea_2 - Ea_1)$

(4) L_S = 60 feet (absolute minimum)

Where:

L_S = Minimum length of compounding spiral (in feet)

Ea_1 = Actual superelevation of first curve (in inches)

Ea_2 = Actual superelevation of second curve (in inches)

Eu_1 = Unbalanced superelevation of first curve (in inches)

Eu_2 = Unbalanced superelevation of second curve (in inches)

V = Design speed (in mph)

3.4.3.2.5 Superelevation

The design speed of a given curve shall be limited to the maximum allowable speed as determined by the following formula based on a standard track gauge of 4 feet 8½ inches:

$$Eq = Ea + Eu = \frac{3.96\ V^2}{R}$$

Where:

Eq = Equilibrium superelevation

Ea = Actual superelevation (in inches)

Eu = Unbalanced superelevation (in inches)

V = Design speed (in mph)

R = Curve radius (in feet)

The equilibrium superelevation is the sum of the actual superelevation (Ea) and the unbalanced superelevation (Eu). When superelevation is applied it shall be in accordance with the following requirements:

- Ea shall have a minimum value of 1 inch and a maximum value of 6 inches. When the calculated required Ea is less than ½ inch, 0 inches shall be used. When it is ½ inch or greater, but not more than 1 inch, 1 inch shall be used.
- Ea shall be specified in ¼ inch increments. When the calculated requirement is not a whole- number multiple of ¼ inch, the next higher multiple of ¼ inch shall be used.
- The unbalanced superelevation (Eu) shall not be greater than plus 4 inches. When zero Ea is used, the value of Eu shall not exceed 2 inches.
- If maximum Eu of 4 inches cannot be maintained to achieve a desirable design speed, the designer may, with written UTA approval, increase the Eu up to maximum of 6½ inches.
- On constant speed curves, the value of Eu shall vary uniformly from 0 when Ea + Eu = 1.00 to 2.50 inches when Ea + Eu = 8.50".
- Design for a Ea value of 0 inches shall be allowed for special occasions such as roadway intersection grade crossings where it is desirable to provide a smooth crossing of the rails..

These additional controls result in the following formula:

$$Ea = \frac{2.64\ V^2}{R} - 0.66$$

Where the following maximum values of Ea or Eu are exceeded, a limit shall be placed on the design speed of a curve:

Ea (direct fixation track) = 6 inches

Ea (ballasted track) = 4 inches

Eu (lateral acceleration < 0.10g) = 4 inches

At special trackwork, as defined in Chapter 4, the actual superelevation (Ea) shall be 0 until the unbalanced superelevation reaches 3 inches. At this point, a limit shall be placed on the design speed through the turnout.

The top of inside rail in a curve shall be set to the design profile grade and the required superelevation shall be applied to the outside rail.

3.4.3.3 Vertical Alignment

3.4.3.3.1 Tangent Alignment

The minimum length of constant tangent grade shall be:

T (desirable minimum) = 3*V or 60 feet, whichever is greater.

At stations, the tangent grade shall extend a desirable minimum distance of 100 feet beyond each end of platform.

All special track work shall be located on tangent grade and the associated points of switches/frog heels shall be located a desirable minimum distance of 60 feet from the point of vertical curvature or grade change. The absolute minimum distance depends on the clearances required for the specific turnout geometry and rail joint locations.

3.4.3.3.2 Grades

Mainline Grade:

Maximum grade (1,500 feet or greater)	4%
Maximum short sustained grade (less than 1,500 feet)	6%
Absolute maximum grade – ballasted track	6%
Maximum grade – embedded and direct fixation track	6%
Minimum grade – embedded track	0.5%

Station Area Grade:

Desirable grade = 0.5%

Maximum grade in any direction = 2.0%

3.4.3.3.3 Vertical Curves

All vertical curves shall be defined by a parabolic curve having a constant rate of grade change as expressed by the formula:

$$M.O. = \frac{(G_1 - G_2)*L}{800}$$

Where:

M.O. = Middle ordinate distance from PVI to curve (in feet)

G_1 - G_2 = Algebraic difference in grades (expressed in %)

L = Length of vertical curve (in feet)

Vertical curves shall be provided at all tangent grade intersections where:

$(G_1 - G_2) > 0.50\%$

Where:

G_1 - G_2 = Algebraic difference in grades (expressed in %)

3.4.3.3.4 Vertical Curve Lengths

The required length of vertical curve shall be the largest length as calculated from the following formula, rounded off to the nearest 1 foot:

(1) L (desirable) = 200 $(G_1 - G_2)$

(2) L (preferred minimum) = 100 $(G_1 - G_2)$

(3) L (absolute min. crest curve) = $\frac{(G_1 - G_2)V^2}{25}$

(4) L (absolute min. sag curve) = $\frac{(G_1 - G_2)V^2}{45}$

Where:

L = Minimum Length of vertical curve (in feet)

G_1 - G_2 = Algebraic difference in grades (expressed in %)

V = design speed (in mph)

Vertical curve lengths less than absolute minimum require prior approval from UTA.

3.4.4 Semi-Exclusive Joint Use LRT/Freight Track Alignment Criteria

UTA owns corridors where temporally separated freight traffic operates. This necessitates the additional below criteria for corridors that share freight traffic, and further refinement and definition of the UTA LRT alignments.

3.4.4.1 Track Center Spacing

The minimum centerline to centerline distance between two tracks shall be 18 feet where there are center OCS poles. Additional distance may be required where the tracks are curved or superelevated. With prior approval from UTA, minimum centerline to centerline track spacing may be reduced if side-mounted OCS poles are to be utilized rather than center mounted poles.

3.4.4.2 Horizontal Alignment and Design Speed

The horizontal track alignment for combined LRV and freight train use in a dedicated rail corridor shall be designed in conformance with the applicable requirements of AREMA's *Manual for Railway Engineering*, latest edition, and any specific requirements of the railroad company. The track alignment shall be based on a maximum civil speed for each curve for both the LRV and freight operations. Unless specified otherwise in this section of the criteria, parameters established for exclusive LRT track in Section 3.3 shall apply.

3.4.4.2.1 Tangents

The following minimum tangent lengths between circular curves and/or spiral transitions shall be observed:

T (desirable min.) = 300 feet

T (absolute min.) = 100 feet

3.4.4.2.2 Circular Curves

The desired minimum radius for joint use track shall be the minimum radius that is required to achieve the maximum design speeds for both the freight train and the LRV based on the maximum allowable equilibrium superelevation requirements as defined in Section 3.4.4.1.4, Superelevation.

Where tracks are designed for use by a freight railroad company, whenever possible and practical, the radii selected for curves shall be such that they result in an even degree, half degree, or quarter degree of curve where the curve is expressed in the chord definition. The relationship between degree of curve (Dc) and radius (R) in the chord definition is established by the following formula:

$$R = 50/(\sin \tfrac{1}{2} Dc)$$

Other chord definition parameters and conventions, such as the determination of curve lengths using chords, shall not be used. The identification of the equivalent chord definition degree of curvature for a curve that will otherwise be calculated using arc definition parameters is strictly a convenience for the use of the railroad in review of the plans and for the maintenance of tracks which they will own.

The length of the circular curve, not including connecting spirals, shall be as follows:

Minimum L = 3*V or 100 feet, whichever is greater, where V = design speed (in mph)

3.4.4.2.3 Spiral Transitions

The minimum length of transition spiral shall be the largest length as determined from the following formulas:

(1) $L_S = 62*Ea$ (track twist at ½ inches per foot)

(2) $L_S = 1.17*Ea*V$ (vehicle roll angle limited to 1.2 degrees per second)

(3) $L_S = 1.22*Eu*V$ (jerk rate less than or equal to .04g/sec)

(4) $L_S = 60$ feet (absolute minimum)

Where:

L_S = minimum length of transition spiral (in feet)

E = actual superelevation (in inches)

V = design speed (in mph)

Eu = unbalanced superelevation (in inches)

3.4.4.2.4 Superelevation

The design speed of a given curve shall be limited to the maximum allowable speed as determined by the following formula based on a standard track gauge of 4 feet - 8 ½ inches.

$$Eq = Ea + Eu = \frac{4.01\,V^2}{R}$$

Where:

Eq = Equilibrium superelevation

Ea = Actual superelevation (in inches)

Eu = Unbalanced superelevation (in inches)

V = Design speed (in mph)

R = Curve radius (in feet)

Superelevation shall be based on a maximum allowable speed of 40 mph for freight traffic and 65 mph for LRV. The actual superelevation shall be established for the maximum LRV design speed such that the resulting equilibrium superelevation for the freight vehicle is not negative.

The equilibrium superelevation is the sum of the actual superelevation (Ea) and the unbalanced superelevation (Eu). Where the following maximum values of these are exceeded, a limit shall be placed on the design speed of a curve:

Ea_{max} = 4.0 inches
Eu_{max} = 3.0 inches for light rail vehicle
Eu_{max} = 1.5 inches for freight rail vehicles

3.4.4.3 Vertical Alignment

3.4.4.3.1 Tangents

Minimum length of uniform grade tangents:

T = 300 feet

3.4.4.3.2 Grades

Mainline Grade:

G (max.) =1.0 %

If existing freight rail grade is greater than 1%, an exception may be made.

Station Area Grade:

Desirable max.= 0.5%

Absolute max. grade in any direction 2.0%

3.4.4.3.3 Vertical Curve Lengths

The lengths of vertical curves shall be calculated as follows, rounded up to the nearest10 feet:

crest curves: $L = 250 (G_1 - G_2)$
sags: $L = 500 (G_1 - G_2)$

3.4.5 LRT Track in Existing Streets Alignment Criteria

3.4.5.1 Horizontal Alignment and Design Speed

The design speed and horizontal alignment of LRT track running in semi-exclusive right-of-way in an existing street is typically determined by the geometrics of the street. In these areas superelevation shall be used to maximize running speeds where possible. The running speed through shared intersections at ungated crossings shall not exceed 35 mph (per Utah Manual of Uniform Traffic Control Devices (MUTCD)).

Street-running track alignment design shall permit the LRVs to run at the posted street speed limit (per MUTCD). The applicable geometric design criteria for the streets shall be used for the design of the tracks. Speed restrictions for safe operations at curves, turnouts and crossovers in a street environment will be established and coordinated with the city or owning agency. Careful consideration shall be given during the design development to the location of the tracks relative to bicycle lanes and crossings and the safe crossing of the tracks by bicyclist. On existing streets, the amount of superelevation may be limited by the required running surface for automobiles. This may, in part, determine the operating speed of the LRV. Unless otherwise noted in this section, the design

requirements outlined in Section 3.4.3 are the desirable values for the street-running track (either semi-exclusive or mixed use) where existing street conditions allow.

3.4.5.1.1 Tangents

On streets, due to right-of-way or other alignment constraints, a tangent may not be required between spirals in reverse curvature where the speed is limited to 20 miles per hour and superelevation is not provided.

3.4.5.1.2 Circular Curves

Minimum curve radius for street running tracks:

R (desirable minimum) = 535 feet (20 mph at Ea=0 and Eu=3 inches)
R (absolute minimum) = 82 feet

Minimum length of circular curve:

L (desired minimum) = 3*V or 60 feet, whichever is greater.

Where:

V = design speed (in mph)

3.4.5.1.3 Spiral Transitions

Spiral transitions shall be used for all street running curves where the calculated equilibrium superelevation is greater than or equal to 1 inch.

The length of spiral transitions shall be as defined in Section 3.4.3.2.5, unless otherwise prohibited by street section or operations constraints. In such cases, the speed limit of the curve shall be restricted to meet the established criteria based on the available spiral transition lengths.

3.4.5.1.4 Superelevation/Cross Slope

For street-running track, superelevation/cross slope shall be designed to accommodate the existing street sections and cross traffic and to assure positive drainage toward storm water inlets. Where street sections are not an issue, the criteria in Section 3.4.3.2.5 shall govern.

3.4.5.2 Vertical Alignment

3.4.5.2.1 Tangents

To the extent practical, the vertical alignment of LRT track running in an existing street shall follow the design criteria as defined in Section 3.4.3.3. If the elevation of the top of rail exceeds the elevation of the top of curb, roadside barrier shall be used in place of curb. If the top of rail exceeds 6 inches below the adjacent roadway, the guideway shall be protected by roadside barrier (i.e., curb, wall, or barrier).

The street-running rail in mixed flow shall meet the profile of the existing street and no minimum tangent length between curves shall be required. However, verification shall be made that the vertical geometry will not impede the vehicle performance.

3.4.6 LRT Lead and Yard Track and Freight Industrial Track Alignment Criteria

3.4.6.1 Horizontal Alignment and Design Speed

The criteria in this section intend to set the minimum standards for track configurations for secondary track. The horizontal alignment in these track areas is often constrained by limited space and exemptions from the criteria may be required. Any exceptions shall be subject to the review and acceptance of UTA.

The design speed for lead and industrial tracks shall be 10 miles per hour. Yard track shall be designed for 20 miles per hour. All design criteria shall be the same as for the exclusive LRT track or for joint use LRT and freight track as applicable except as noted in this section.

3.4.6.1.1 Tangents

The minimum tangent length is: T (min.) = 50 feet

Tail Tracks shall be tangent with no curves.

3.4.6.1.2 Circular Curves

Circular curves shall be provided for sidings and yard tracks where: The minimum radii for the LRT yard is:

R (min.) = 100 feet
R (absolute min.) = 82 feet

For lead tracks:

R (min.) = 300 feet
R (absolute min.) = 82 feet

For freight industrial spurs:

Dc (desirable max.) = 12°30' (chord definition)
R (min) = 459.28 feet

Freight industrial spurs may have smaller radii than the value above if the existing railroad freight spur includes curvature sharper than that.

3.4.6.1.3 Spiral Transitions

Although not required, spiral curves are preferred for design speeds greater than 10 miles per hour. Spirals shall be used on any track where superelevation is applied.

3.4.6.1.4 Superelevation

Yard, shop, and industrial tracks shall not be superelevated. Lead tracks shall be superelevated where conditions permit.

3.4.6.1.5 Vertical Alignment

Yard and storage tracks shall be either level or create a sag condition wherever possible, so parked rolling stock cannot drift out onto main tracks.

3.4.6.1.6 Grades

- Yard Tracks desirable max. = 0.0%
- Yard Tracks absolute max. = 1.0%
- Tail Tracks desirable max. = 0.0%
- Tail Tracks absolute max. = 1.0%
- Lead and Industrial Tracks desirable max. = 0.2%
- Lead and Industrial Tracks absolute max. = 1.0%

Grade compensations are not required.

3.4.7 Clearances

3.4.7.1 Vehicle Clearances

A composite design vehicle (CLRV) has been established based on the most critical vehicle dimensions and operational characteristics of the vehicles currently owned by UTA. For new design and development, consideration shall also be given to planned vehicle types, including Stadler LRVs, and where such vehicles impose more restrictive requirements, they shall govern.

3.4.7.1.1 Static Outline

The static dimensions of the composite LRV, as defined in Figure 3-9, include mirrors on each side and at the end of the LRV. The mirrors are assumed to be located typically from 7 feet to 10 feet above the top of rail and extend a maximum of 6 inches outside of the normal static vehicle envelope.

Figure 3-9: CLRV Static Dimensions and Dynamic Outline (Tangent Track) - SD LRVs only

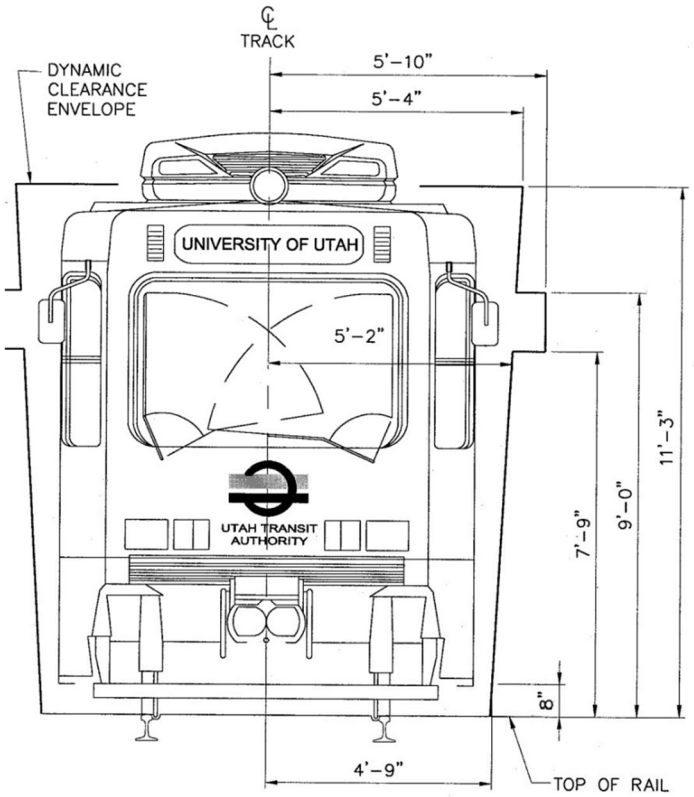

DYNAMIC CLEARANCE AT VARIOUS HEIGHTS	
HEIGHT ABOVE T/R	OFFSET FROM CENTERLINE
7'–9"	5.14' *
7'	5.10'
6'	5.04'
5'	4.99'
4'	4.93
3'–6"	4.91'
3'	4.88'
30"	4.85'
24"	4.82'
18"	4.80'
12"	4.77'
10"	4.76'
8"	4.75'

* THIS OFFSET IS JUST UNDER THE DYNAMIC ENVELOPE OF THE LRV MIRROR.

LRV DYNAMIC CLEARANCE ENVELOPE

3.4.7.1.2 Dynamic Outline

The dynamic outline of the composite LRV includes the anticipated dynamic movement of the vehicle during operation and factors to account for wear of both vehicle and track components during the life of the system. The major factors which affect the dynamic outline consist of the following:

- Lateral roll of the vehicle
- Primary and secondary suspension failure
- Vehicle body yaw
- Lateral play in the wheels
- Rail wear and wheel flange wear
- Vehicle manufacturer's tolerances

The actual extent to which these factors affect the total dynamic envelope are based on the specific vehicle selected and are only approximate.

The static and dynamic outlines of the composite LRV shown in Figure 3-9 shall be used as a basis for determining vehicle clearances to fixed facilities.

3.4.7.1.3 Track Curvature and Superelevation Adjustment

Where a light rail vehicle enters a horizontal curve–including turnouts–the dynamic outline shall be adjusted for overhang at the end of the vehicle and for middle ordinate shift (belly-in) midway between the trucks (bogies) of the vehicles. The presence of superelevation shall increase the middle ordinate shift particularly toward the top of the vehicle. Refer to Figure 3-10 for further illustration.

Figure 3-10: CLRV Static/Dynamic Dimensions on Curved/Superelevated Track

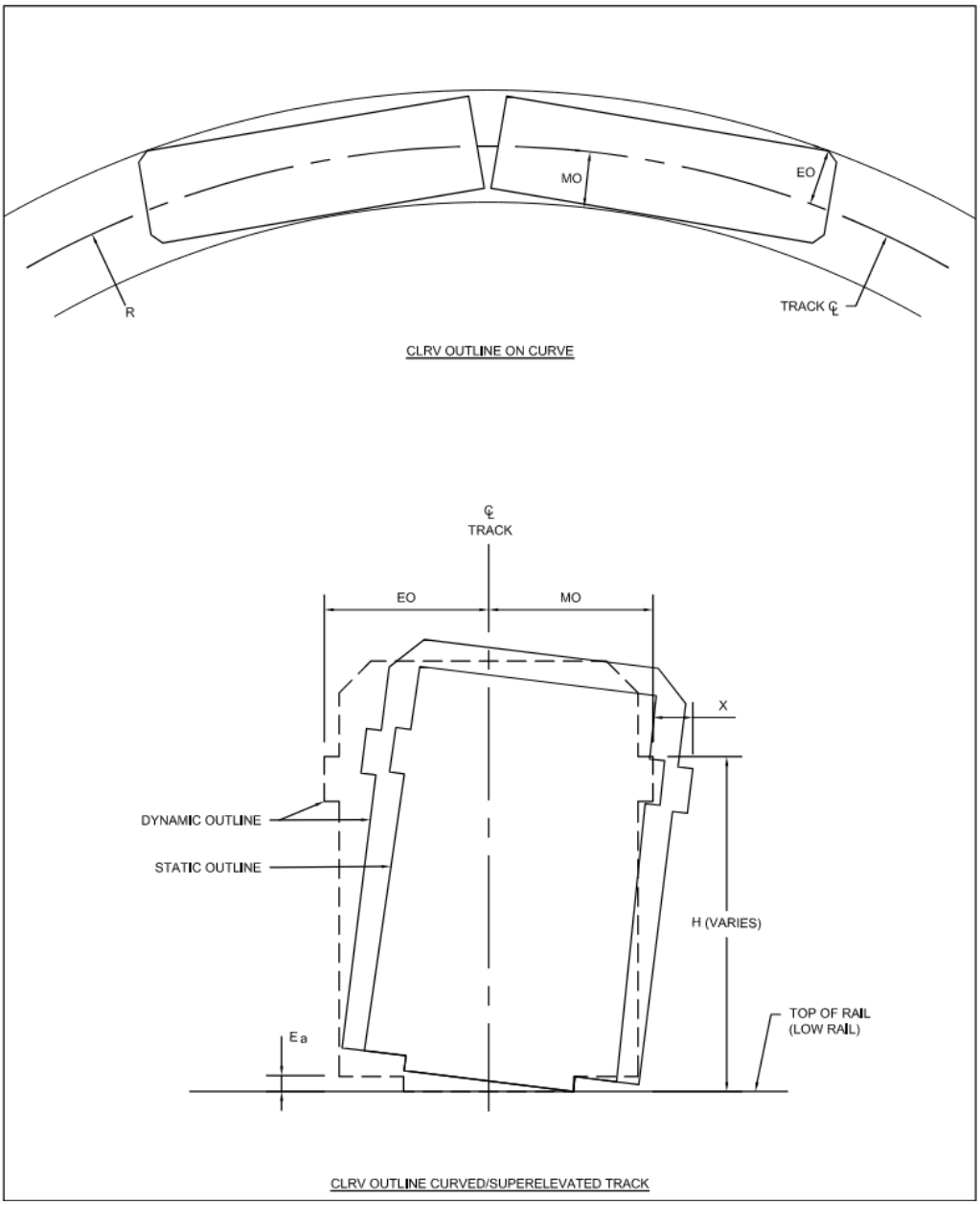

3.4.7.1.4 Vehicle Middle Ordinate Shift and End Overhang

Values for the design vehicle middle ordinate shift toward the curve center, and the design vehicle end overhang away from the curve center are tabulated in Table 3-6. These values shall be used during preliminary design as a

basis for determining vehicle clearances to fixed facilities. For values of radii that lie between that which is shown in the table, interpolation shall be utilized to calculate the middle ordinate and end overhang.

Table 3-6: Design Vehicle Middle Ordinate Shift and End Overhang for Various Radii - SD LRVs Only

Radius (ft)	MO Max (ft)	EO Max (ft)
82	6.56	8.50
100	6.34	8.07
150	6.00	7.37
200	5.83	7.00
210	5.83	6.95
250	5.83	6.78
300	5.83	6.63
350	5.83	6.52
400	5.83	6.43
450	5.83	6.37
500	5.83	6.31
600	5.83	6.24
700	5.83	6.18
800	5.83	6.14
900	5.83	6.10
1000	5.83	6.08
2000	5.83	5.96
3000	5.83	5.91
4000	5.83	5.89
5000	5.83	5.88
10000	5.83	5.86

Note: Middle ordinate shift and end overhang values for S70 LRVs are provided in Section 3.5 (Streetcar Track Alignement Criteria).

3.4.7.1.5 Vehicle Shifts Due to Superelevation

The distance from the centerline of track to the middle ordinate of the vehicle shall be increased where superelevation is applied in a curve. The maximum shift toward the curve centerline based on a desired distance H feet above the top of rail can be calculated by the formula:

$$X = 0.0177\ Ea\ H$$

Where:

X = lateral shift due to superelevation (in inches)
Ea = actual superelevation (in inches)
H = height of point of analysis on vehicle (in inches)

Figure 3-10 indicates how these dimensions relate to the CLRV.

3.4.7.1.6 Turnouts

Where a light rail vehicle travels through the diverging route of a turnout the dynamic outline is affected. During final design, the dynamic outline shall be checked adjacent to, and 45 feet beyond, all curved components (switches, closure rails) of the diverging turnout route to determine potential conflicts with adjacent structures, poles, etc.

3.4.7.1.7 Mirrors

The CLRV shall include mirrors on each side toward the end of the vehicle. Mirrors are typically located 7 to 10 feet above top of rail and extend 6 inches outside the edge of the vehicle.

For clearance requirements mirrors shall be considered for tangent track and for the outside of all curves. Mirrors shall be considered for the inside of curves with a radius greater than 210 feet (middle ordinate shift shall govern for curves with radius less than 210 feet).

3.4.7.2 Horizontal Clearances

All existing and proposed structures, including catenary poles, bridge pier columns, and retaining walls shall clear the total CLRV dynamic outline as defined in Section 3.4.8.3, by a distance equal to or greater than the sum of applicable clearances and tolerances defined in this section.

Clearances shall be checked between the CLRV dynamic outline and all adjacent structures along tangent track and at turnouts a minimum of 50 feet in either direction of the structures. This is to verify that an adjacent curved track does not affect the clearance in the adjoining tangent section.

3.4.7.2.1 Clearance to Obstructions

The distance between any fixed object along the trackway and the centerline of track shall be equal the design envelope:

design envelope = (dynamic outline) + (running clearance) +
(construction and maintenance tolerances)

Exceptions to the design envelope requirements are listed in Section 3.4.7.4.

Figures 3-11 and 3-12 illustrate the required clearance envelope at station platforms.

Figure 3-11a: Freight and LRV Low-Center Platform Minimum Clearance Diagram

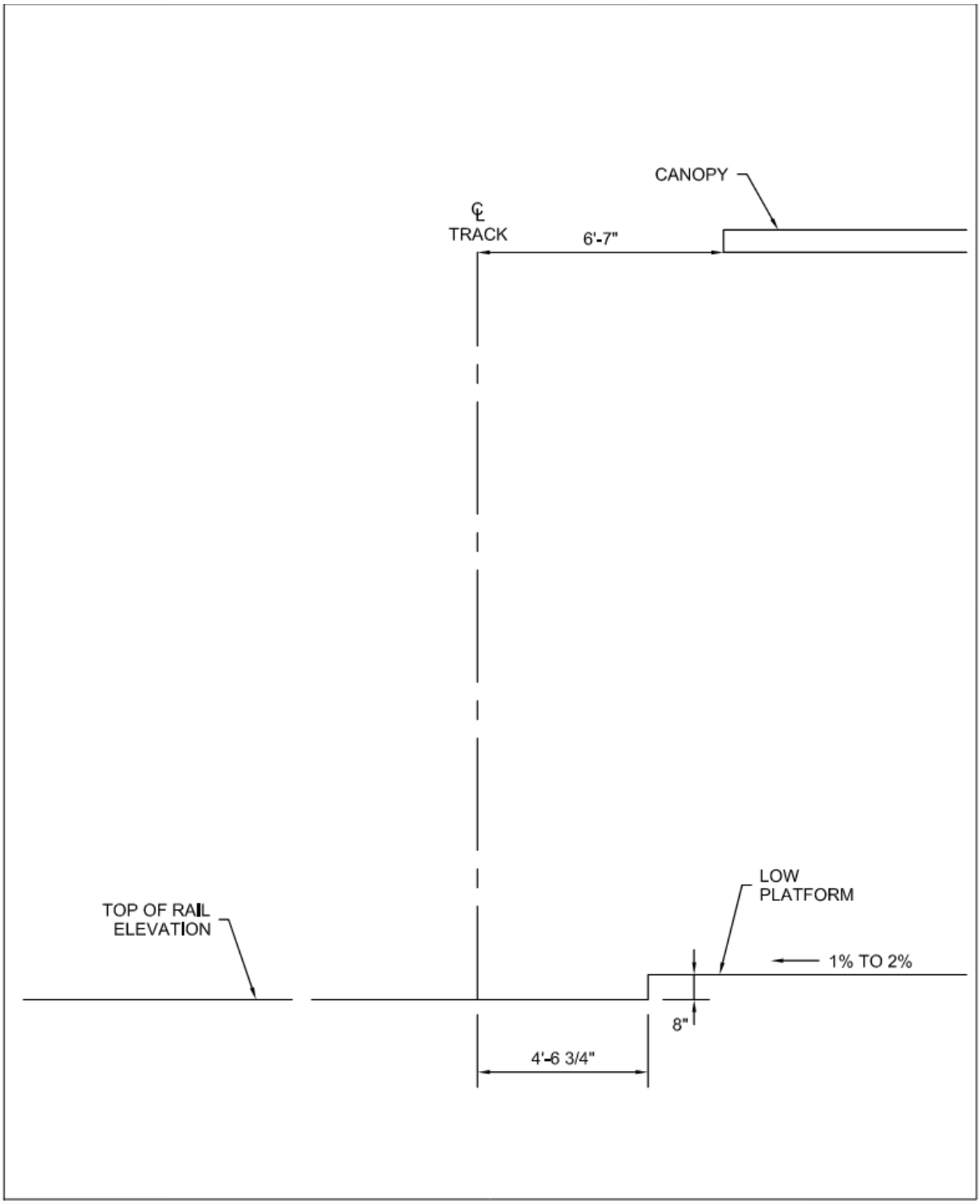

Figure 3-11b: LRV Only Low-Center Platform Minimum Clearance Diagram

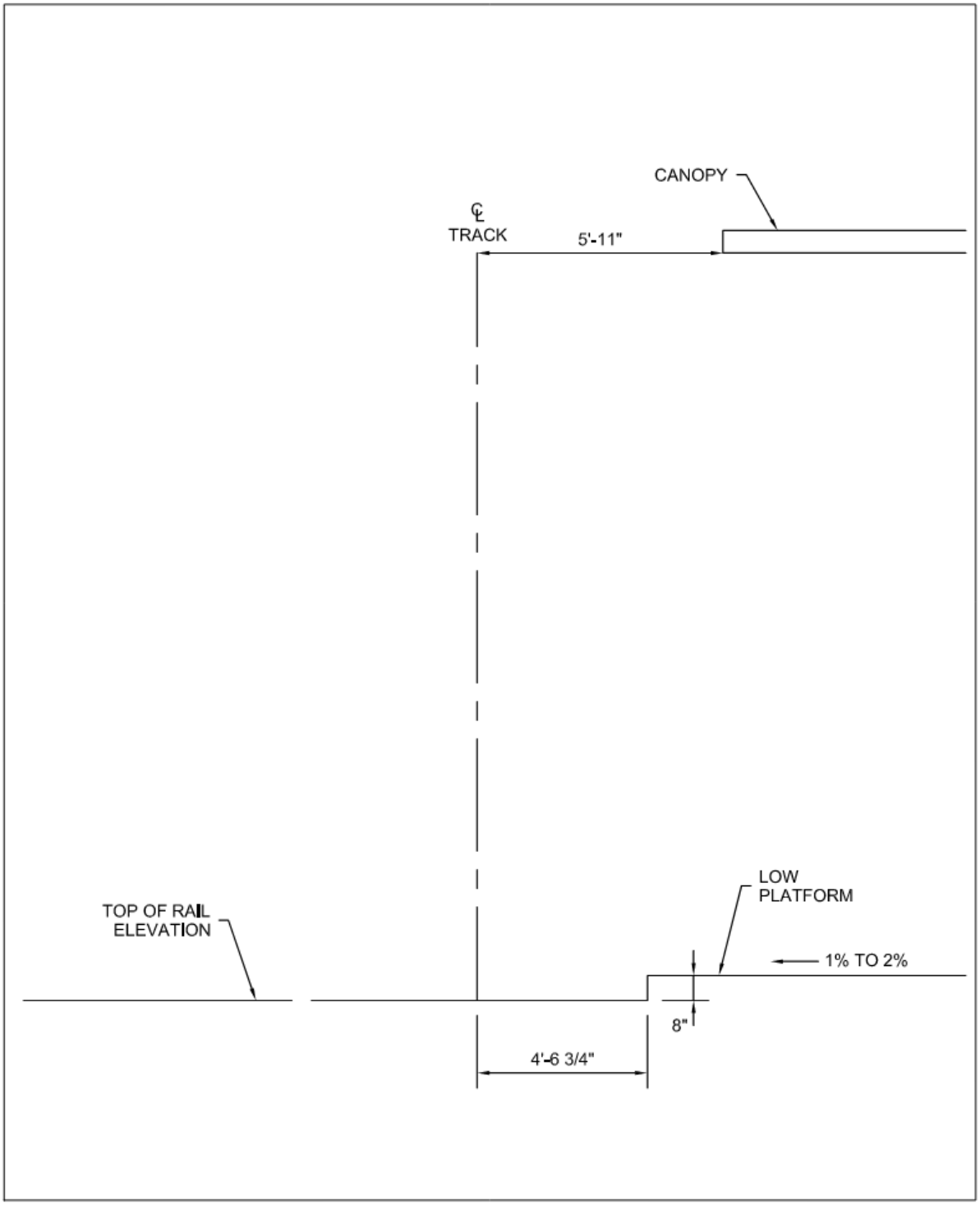

Figure 3-12a: Freight and LRV Mini-High Block Platform Minimum Clearance Diagram

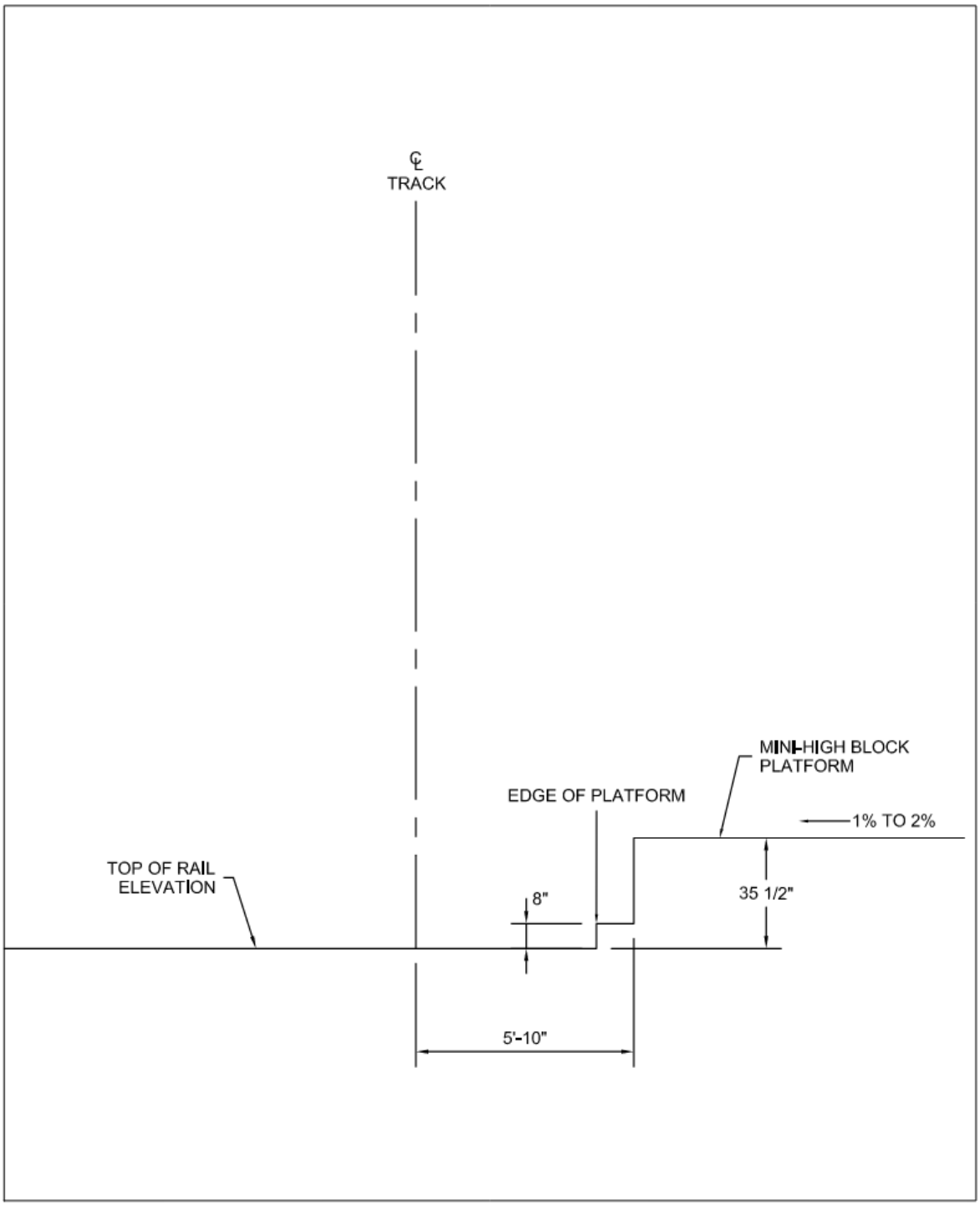

NOTE: MINI HIGH BLOCKS ARE ONLY ALLOWED FOR EXISTING HIGH FLOOR VEHICLES.

Figure 3-12b: LRV Only Mini-High Block Platform Minimum Clearance Diagram

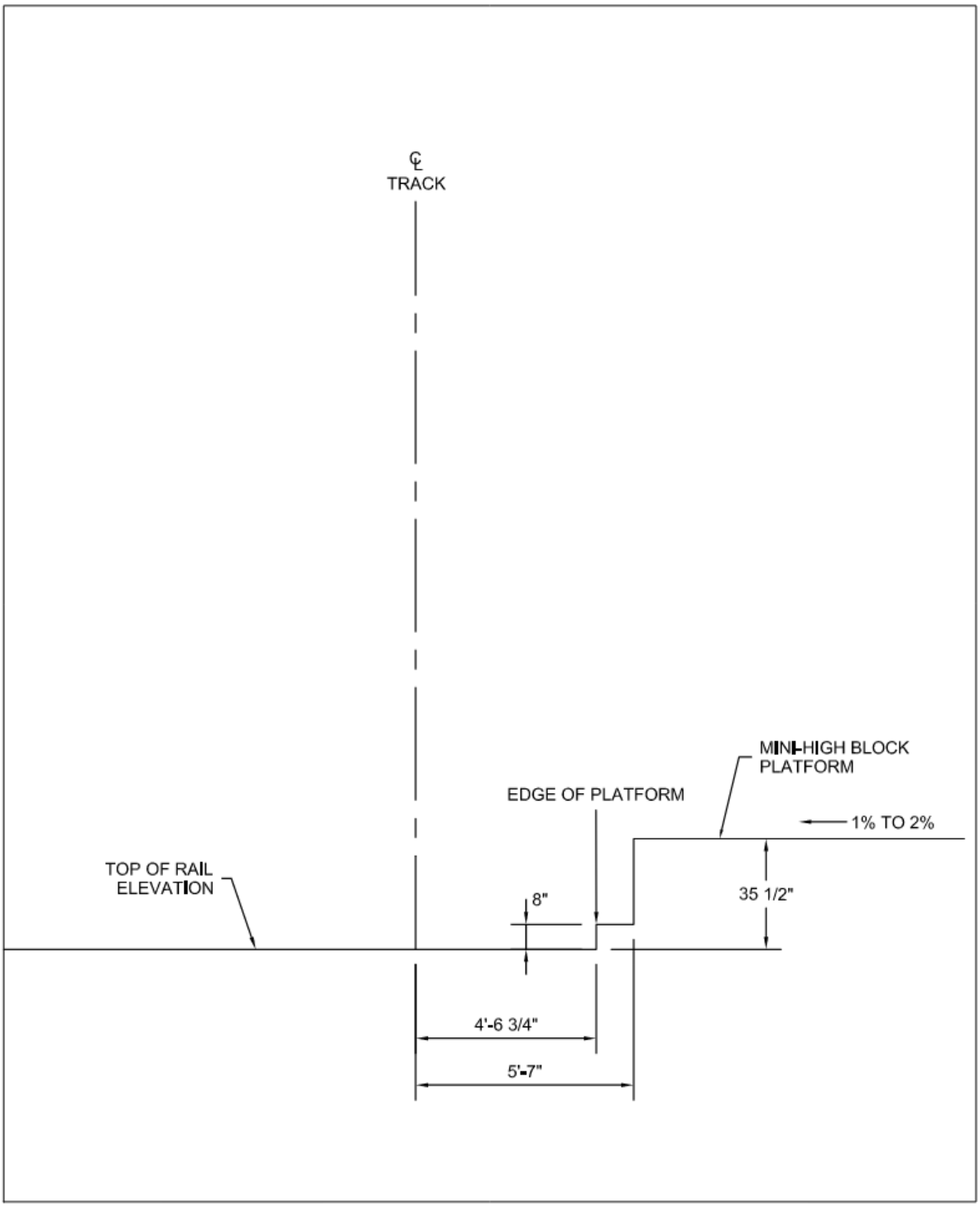

NOTE: MINI HIGH BLOCKS ARE ONLY ALLOWED FOR EXISTING HIGH FLOOR VEHICLES.

3.4.7.2.2 Running Clearances

Design running clearances for exclusive LRT track shall be:

- 4 inches for poles and structural supports
- 2 inches for all other permanent structures

3.4.7.2.3 Construction Tolerances along Proposed Structures

A construction tolerance is required where a new structure is constructed adjacent to or above the LRT. This tolerance is added to the base construction and maintenance tolerance and applies to construction that is part of the LRT project or future construction. These values are for purposes of providing clearances only and are not a guidance for what construction tolerances are acceptable to UTA. In addition to structures built as part of the UTA project, they anticipate deviations from plan of any future structures built alongside of the track by others over whom UTA may have only limited control.

These clearances shall be:

- 6 inches for soldier pile and lagging walls
- 1 inch for other proposed structures

3.4.7.2.4 Track Construction and Maintenance Tolerances

Track construction and maintenance tolerances account for a combination of factors such as track misalignment, wheel and track gauge tolerances, and wheel and rail wear. These tolerances also include provision for any cross-level variances between the track rails due to unintentional construction inaccuracies and possible deferral of track maintenance during operation of the system. The following track construction and maintenance tolerances apply:

- Direct fixation or embedded track: ½ inch
- Mainline tie and ballast track: 3 inches
- Special track work: ½ inch
- Yard track: 3 inches

3.4.7.3 Horizontal Clearances for Joint Use Freight/LRT Tracks

This area outlines the following horizontal clearances for joint use freight tracks/LRT tracks as follows:

- To an obstruction on tangent: 8 feet 6 inches
- To an obstruction on curve: 10 feet preferred min.

The absolute minimum shall be determined based on overhang and middle ordinate shift calculations or the standards of the involved freight railroad.

- To property line or curb: 12 feet preferred min.
- Fence of adjacent street: 10 feet 6 inches min.

3.4.7.4 Exceptions to Design Envelope Clearances

All structures installed above the top of the nearest rail shall be set either at or beyond the design envelope with the following exceptions below.

3.4.7.4.1 Retaining Walls

Retaining walls shall comply with the minimum clearance requirements outlined below.

Cut Sections

The minimum clearance from the centerline of tangent track to the nearest face of the wall shall be the largest of the following:

- The dynamic envelope clearance
- 7 feet 1 inch for LRT exclusive track
- 8 feet 6 inches for joint use LRT/freight track

Fill Sections

The top of a retaining wall below track grade shall be at the same elevation as the top of the rail nearest to the wall. The clearance distance from the centerline of tangent track to the near face of the retaining wall shall be an absolute minimum of 6 feet (8 feet 6 inches for joint use).

Wayside Signals

In cases where retaining walls and wayside signals are both used, additional clearances shall be provided for the installation of the signals. The civil and structural designers shall coordinate with the train control system designers provide space for wayside signal equipment, ensure space for maintenance employees to service signal equipment, and to assure that train operators have a clear line of sight to signal indications at appropriate distances from the signal.

Safety Clearances

Space shall be provided to allow for emergency evacuation of LRT passengers and provide an area for maintenance personnel to safely stand during passage of trains. This space should be provided in areas of restricted right-of-way, in areas of retained cut and fill, and on structures. The space should be 6:1 slope or flatter and nominally 30 inches in width. The space shall be located to fulfill the following requirements:

- 30 inches of width beyond the static vehicle envelope
- 18 to 24 inches of width beyond the vehicle dynamic envelope

Where a minimum clearance value is applied on one side of the track, it shall not simultaneously be used on the other side of the track, as a safe refuge area shall be provided for passengers being evacuated from a train and for maintenance-of-way employees.

3.4.7.5 Vertical Clearances

The following minimum vertical clearances are required from the top of the high rail to the underside of any grounded fixed structure, within the horizontal limits of the design envelope:

Table 3.7: LRT

Trackway Environment	Minimum Height of Overhead Obstruction
Exclusive LRT track in dedicated rail corridor	18′-0″ plus the depth of the catenary system[1], preferred
	15′-0″ plus depth of catenary system, target minimum[1,2]
	14′-3″ plus depth of catenary system, absolute minimum[1, 2, 3]
Joint use LRT/freight track	22′-6″ plus the depth of the catenary system[1], absolute minimum
LRT in street with mixed traffic in same lane or exclusive LRT being crossed by roadway at grade	18′-0″ plus the depth of the catenary system[1], preferred minimum[4]
	16′-0″ plus the depth of the catenary system[1], absolute minimum[4]

Notes

1. The depth of catenary system can vary depending on support system used and shall include electrical clearances as defined in Section 12.5.13. Coordinate with OCS designers.
2. This requires special OCS structures and may not be suitable for higher speeds. Coordinate with OCS designers.
3. LRV pantograph may be close to its “lockdown” height. Coordinate with vehicle designers and UTA vehicle maintenance staff.
4. Per the National Electrical Safety Code, the trolley contact wire shall not be less than 18′-0″ above the top of any roadway pavement under any condition of loading (including wind and ice loading) or temperature. Exceptions from the code shall be obtained for any clearance less than that minimum.

3.5 Streetcar Track Alignment Criteria

Streetcar alignment criteria shall comply with UTA Light Rail Transit Design Criteria. The criteria given herein shall be utilized where use of the LRT parameters is not feasible due to geometric constraints and/or undue cost.

3.5.1 Horizontal Alignment

Horizontal alignment shall follow the design criteria as defined in Section 3.4.3.2, with the exceptions stated within this section.

The horizontal alignment for the streetcar track shall consist of tangents, circular curves, and transition spirals. The streetcar alignment generally includes at-grade segments where streetcar vehicles will operate on a shared right-of-way with vehicular and bicycle traffic within city and/or arterial streets. Careful consideration shall be given during design development to the location of the tracks relative to traffic lanes, bicycle lanes, parking lanes, and station platforms, including the safe crossing of tracks by bicyclists.

The alignment design speed shall take into account the spacing of stations, location of curves, construction limitations, and vehicle performance characteristics. Street-running track alignment design shall permit the streetcar vehicles to run at the legal street speed limit and per MUTCD at Highway–LRT at-grade intersections. The applicable geometric design criteria for the streets shall be used for the design of the tracks. Speed restrictions for safe operations at curves, turnouts and crossovers in a street environment will be established and coordinated with the owning agency.

3.5.1.1 Tangents

The following minimum tangent lengths between circular curves or spiral transitions shall be observed: T (desirable min.) = 3*V or 30 feet, whichever is greater

T (absolute min.) = 0 feet (use only with adequate spirals and prior approval of UTA)

At station platforms, tangent track shall extend an absolute minimum of 30 feet beyond the platform limits to ensure a constant gap between the low floor vehicle and the platform edge.

If adjacent curves in the same direction cannot be replaced by a single simple curve due to geometric constraints, a series of compound curves joined by transition spirals shall be the preferred arrangement (see Section 3.5.1.3 for spiral lengths for this circumstance).

All turnouts shall be located on tangent track. Points of switches shall be located a minimum of 30 feet from the ends of station platforms. Points of switches and frog heels shall desirably be located a minimum distance of 60 feet from points of horizontal curvature of mainline track. In situations where this is not practical, lesser distances are permitted with the approval of UTA.

Refer to Section 3.4.3.2.2, 'Special Trackwork,' Table 3.5.

3.5.1.2 Circular Curves

Circular curves shall follow the design criteria as defined in Section 3.4.3.2.3, with the exception of the formulas provided under this section.

The length of the circular curve, not including connecting spirals, shall be as follows:

Minimum L = 1.5*V, where V = design speed (in mph) (one second of travel time at design speed)

In locations with geometric constraints and with prior UTA approval, the length of the circular curve added to the sum of one-half the length of both spirals is an acceptable method of determining compliance with the above criteria.

3.5.1.3 Spiral Transitions

Spiral transitions shall be used at all mainline curves of radii of less than 10,000 feet (where possible). Per TCRP Report 155, section 3.2.5.1, A spiral transition is preferred, but not required, on track where the design speed is 10 mph or less. This transition is required to eliminate the abrupt change in direction of the vehicle wheel path from tangent track to curved track, to provide a smooth transition for the rate of change of applied superelevation, and to provide a comfortable transition for the rate of change of lateral acceleration.

Transition spirals shall be true clothoid spirals, where the instantaneous radius varies directly with the distance from the point of tangency. The length of spiral transitions shall be as defined in this section unless otherwise prohibited by street section or operations constraints. In such cases, the speed limit of the curve shall be restricted to meet the established criteria based on the available spiral transition lengths.

The minimum length of transition spiral shall be the largest length as determined by the following formulas:

(1) $L_S = 31*Ea$ (track twist not to exceed 1 inch in 31 feet)

(2) $L_S = 1.10*Ea*V$ (superelevation runoff/vehicle roll limited to 1.33 inches per sec.)

(3) $L_S = 0.82*Eu*V$ (0.1g max. lateral acceleration, jerk rate limited to 0.04 g/sec, and Eu max. of 4.5 inches)

(4) $L_S = 31$ feet (absolute minimum)

Where,

L_S	=	minimum length of transition spiral (in feet)
Ea	=	actual superelevation (in inches)
V	=	design speed (in mph)
Eu	=	unbalanced superelevation (in inches)
Twist	=	rate of change of cross level of track due to applied superelevation
Jerk rate	=	rate of change of lateral acceleration

For geometrically constrained embedded track locations and with prior approval of UTA, the formulas above may be substituted with those found in the latest version of AREMA Chapter 12 Part 8.

Where compound curves are used, the minimum length of connecting transition spiral shall be the largest length as determined by the following formulas:

(1) $L_S = 31^*(E_{a2} - E_{a1})$

(2) $L_S = 1.10^*(Ea_1 - Ea_2)^*V$

(3) $L_S = 0.82^*(Eu_1 - Eu_2)^*V$

(4) $L_S = 31$ feet (absolute minimum)

Where,

L_S	=	Minimum length of compounding spiral (in feet)
Ea_1	=	Actual superelevation of first curve (in inches)
Ea_2	=	Actual superelevation of second curve (in inches)
Eu_1	=	Unbalanced superelevation of first curve (in inches)
Eu_2	=	Unbalanced superelevation of second curve (in inches)
V	=	Design speed (in mph)

3.5.1.4 Superelevation

Superelevation shall follow the design criteria as defined in Section 3.4.3.2.5, with the exceptions listed within this section. For street-running track, superelevation/cross slope shall be designed to accommodate the existing street sections and cross traffic, and to assure positive drainage toward storm water inlets. Where street sections are not an issue, the criteria in this section shall govern.

Where superelevation is applied, it shall adhere to the following requirements:

- Ea shall have a minimum value of 1 inch and a maximum value of 6 inches. When the calculated required Ea is less than ½ inch, 0 inches shall be used. When it is ½ inch or greater, but not more than 1 inch, 1 inch shall be used.
- Ea shall be specified in ¼-inch increments. When the calculated requirement is not a whole- number multiple of ¼-inch, the next higher whole-number multiple of ¼-inch shall be used.
- Design for a Ea value of 0 inches shall be allowed for special occasions such as roadway intersection grade crossings where it is desirable to provide a smooth crossing of the rails.

The unbalanced superelevation (Eu) shall not be greater than plus 4.5 inches.

Where the following maximum values of Ea or Eu are exceeded to reach the desired design speed, these maximum values shall be used, and a limit placed on the design speed of a curve:

Ea (direct fixation track, embedded track in an exclusive lane) = 6 inches
Ea (embedded track in a shared lane) = 3 inches
Ea (ballasted track) = 4 inches
Eu (lateral acceleration < 0.10g) = 4.5 inches

Because of the cross slope of the street, in a mixed traffic situation, it is possible that Ea will be a negative number. In this instance, any negative Ea needs to be added to the value of Eu and that sum used to determine the requisite spiral length.

3.5.2 Vertical Alignment

3.5.2.1 Tangents

To the extent practical, the vertical alignment of Streetcar shall follow the design criteria as defined in Section 3.4.3.3.1. The minimum length of constant tangent grade shall be:

$T\ (desirable\ minimum)\ =\ 3\ V, or\ 40\ feet$, whichever is greater.

At stations, the tangent grade shall extend a minimum distance of 30 feet beyond each end of platform.

All special track work shall be located on tangent grade and the associated points of switches/frog heels shall be located the values shown in Section 3.4.3.2.2, Special Trackwork Table 3.5. The absolute minimum distance depends on the clearances required for the specific turnout geometry and rail joint locations.

Street-running track shall meet the profile of the existing street, and no minimum tangent length between curves shall be required. However, verification shall be made that the vertical geometry will not impede the streetcar vehicle performance.

3.5.2.2 Grades

Grades shall follow the design criteria as defined in Section 3.4.3.3.2, except as noted within this section. Station Area Grade: max. grade = 2.0%

3.5.2.3 Vertical Curve Lengths

Vertical curves shall follow the design criteria as defined in Section 3.4.3.3.4, except as noted within this section. The minimum equivalent radius of vertical curvature on mainline tangent track shall not be less than 820 feet for crests and 1150 feet for sags. This equivalent radius of curvature can be calculated from the following formula:

$$Rv = L/(0.01(G_1 - G_2))$$

Where:

Rv = min. radius of curvature of a vertical curve in feet

Vertical broken-back curves and short horizontal curves at sags and crests should be avoided.

The minimum requirements in this section are the preferred standards; however, existing conditions may require exemptions on a case-by-case basis. Vertical curve lengths and radii of vertical curvature less than absolute minimum require approval from UTA.

3.5.3 Clearances

3.5.3.1 Vehicle Description

This design vehicle is based upon the Siemens ultra-short S70 low-floor light rail vehicle (81.37 feet long). For new design and development within street-running or mixed-use corridors, consideration shall be given to all current and planned revenue vehicle types operating on the UTA system, including Stadler LRVs. Where Stadler vehicle characteristics govern or are more restrictive than existing criteria, design shall accommodate the more restrictive condition.

3.5.3.1.1 Static Outline

The static dimensions of the design vehicle are shown in Figure 3-13a (see Section 3.4.7.1.1).

3.5.3.1.2 Dynamic Outline

The dynamic outline of the streetcar vehicle includes the anticipated dynamic movement of the vehicle during operation and factors to account for wear of both vehicle and track components during the life of the system. Dynamic outline dimensions are shown in Figure 3-13b. The static outline and assumed dynamic clearance of the design vehicle shown in Figures 3-13a and 3-13b (see Section 3.4.7.1.2) shall be used during design as a basis for determining vehicle clearances to fixed facilities.

3.5.3.2 Track Curvature and Superelevation Adjustment

Where a rail vehicle enters a horizontal curve–including turnouts–the dynamic outline shall be adjusted for overhang at the end of the vehicle and for middle ordinate shift (belly-in) midway between the trucks (bogies) of the vehicles. The presence of superelevation shall increase the middle ordinate shift, particularly toward the top of the vehicle. Refer to Figure 3-14 for further illustration.

Figure 3-13a: Streetcar Design Vehicle Static Dimensions

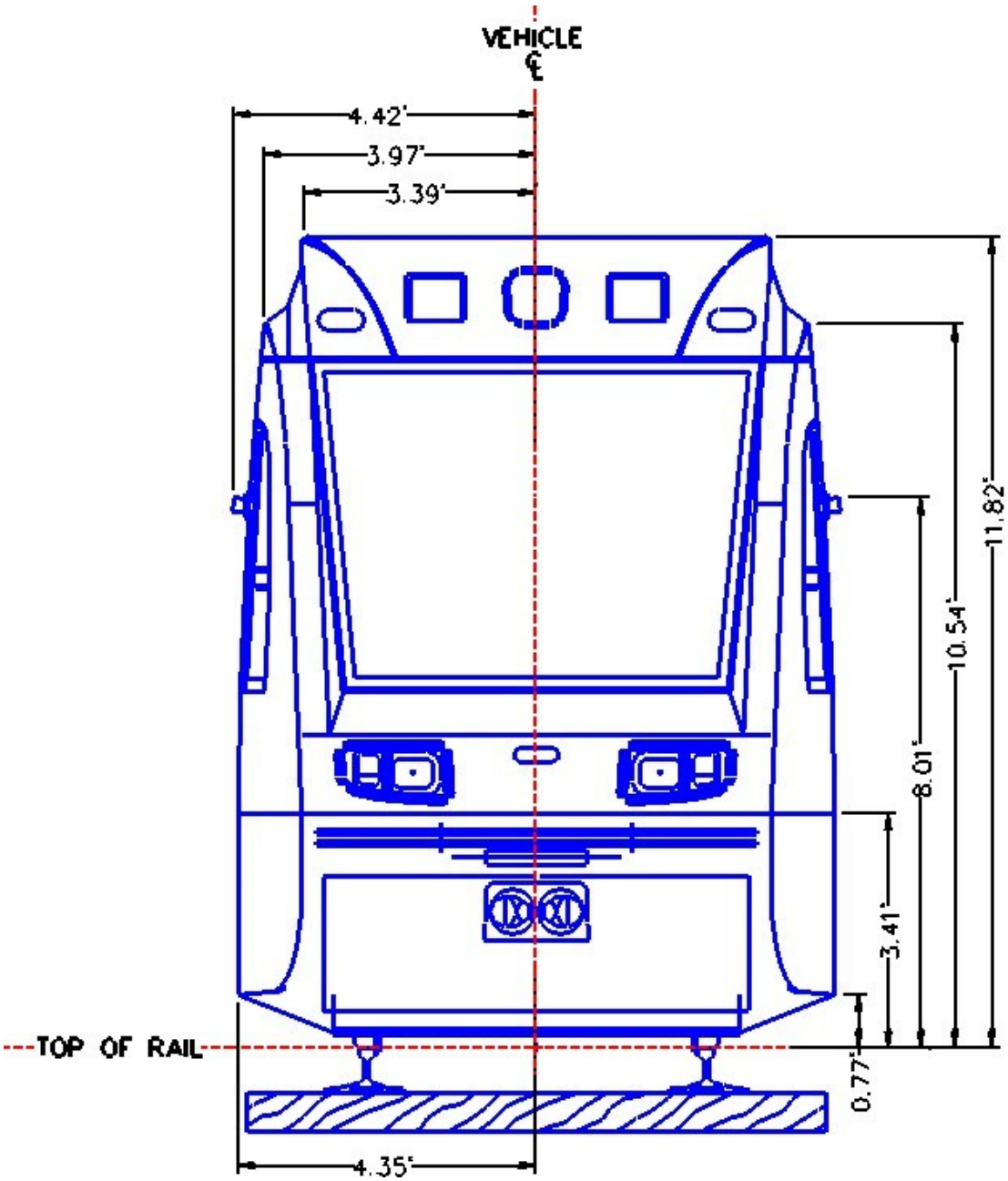

Figure 3-13b: Streetcar Design Vehicle Dynamic Dimensions

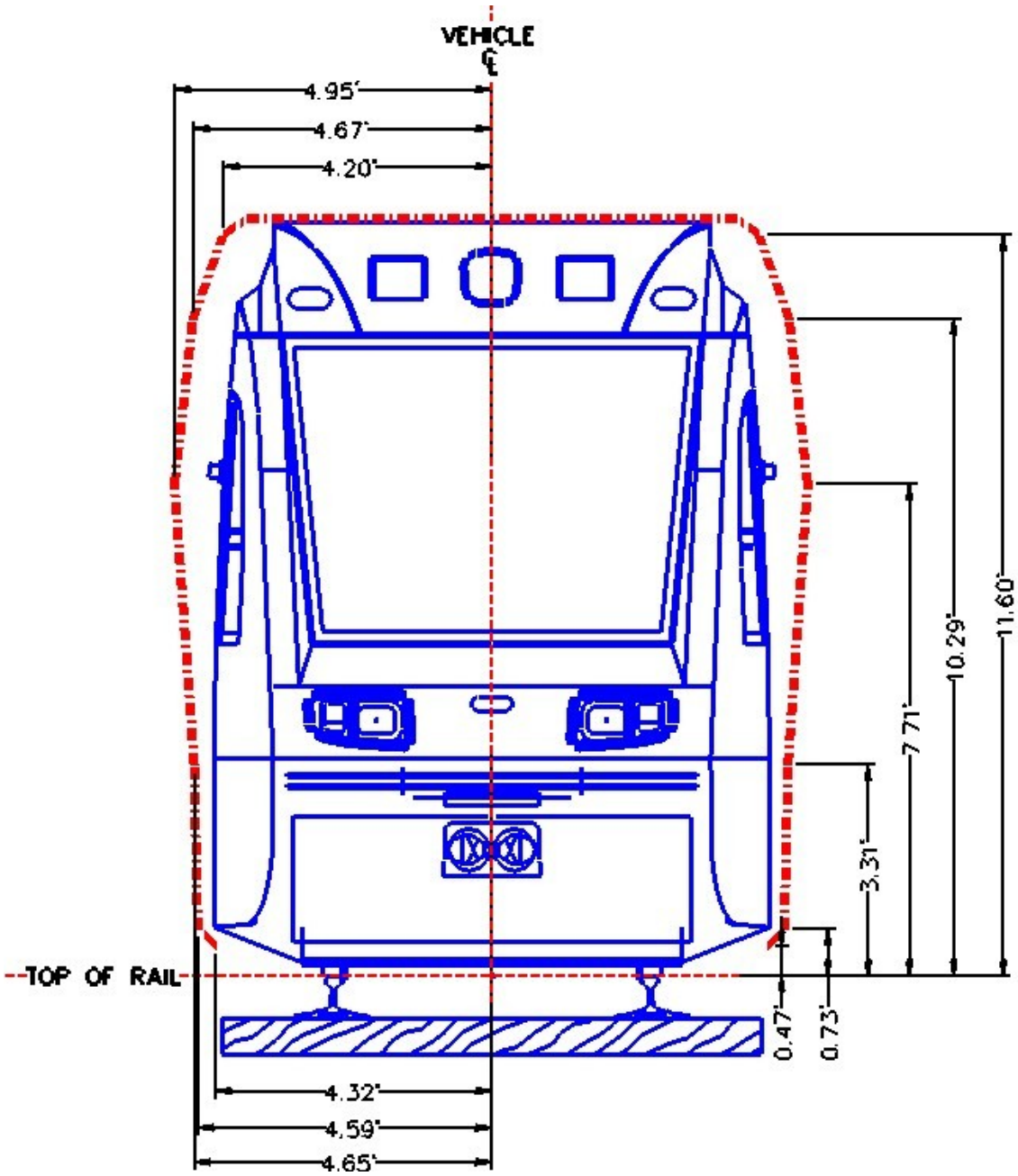

Figure 3-14: Vehicle Static/Dynamic Dimensions on Curved/Superelevated Track

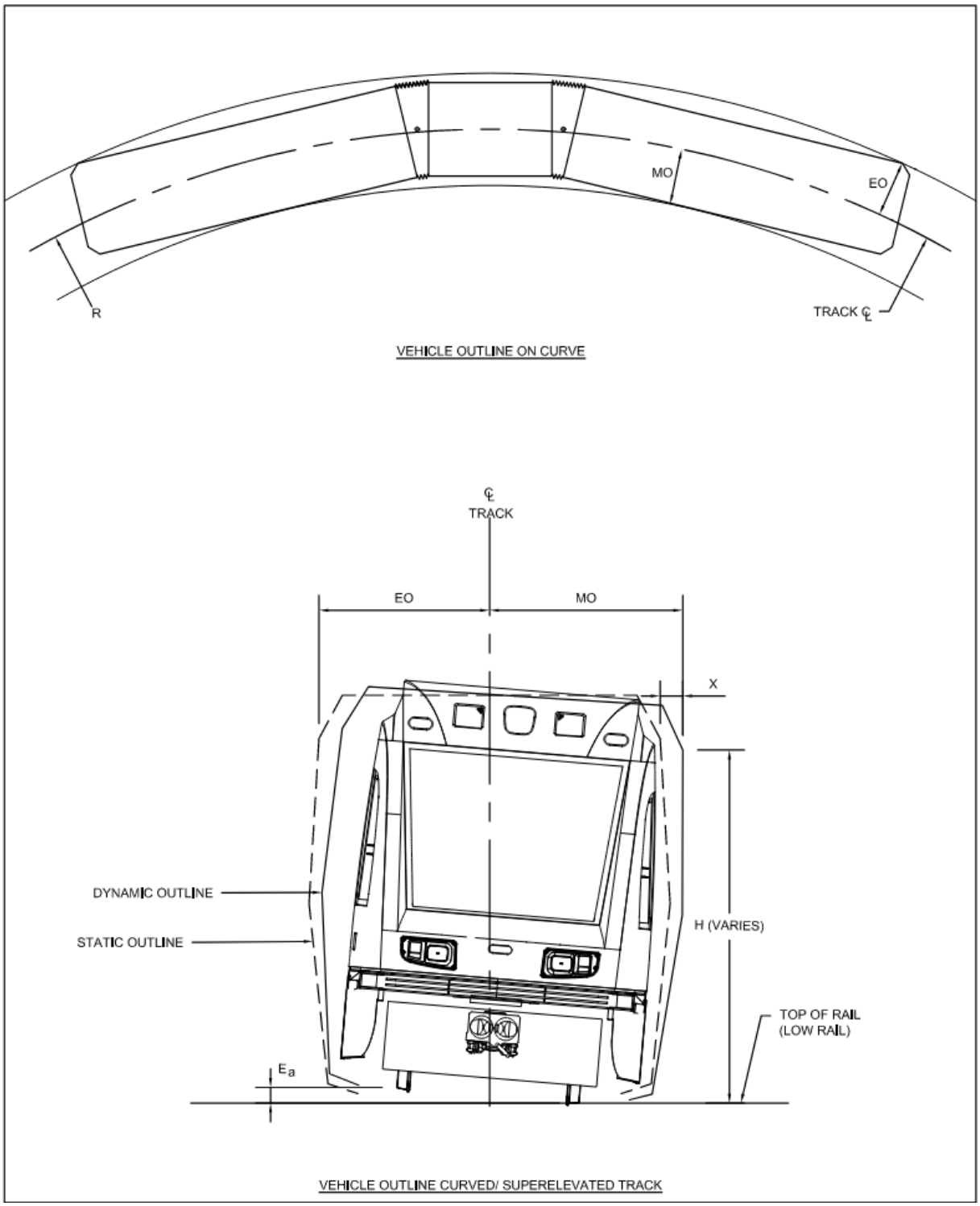

3.5.3.2.1 Vehicle Middle Ordinate Shift and End Overhang

Values for the design vehicle middle ordinate shift toward the curve center, and the design vehicle end overhang away from the curve center are tabulated in Table 3-8. These values shall be used during preliminary design as a basis for determining vehicle clearances to fixed facilities. For values of radii that lie between that which is shown in the table, interpolation shall be utilized to calculate the middle ordinate and end overhang.

Table 3-8: Design Vehicle Middle Ordinate Shift & End Overhang – S70 LRV Only

Centerline Track Radius (ft)	Mid-Ordinate (ft)	End Overhang (ft)
82	5.62	6.13
100	5.50	5.89
150	5.31	5.53
200	5.22	5.35
250	5.16	5.27
300	5.13	5.21
350	5.10	5.18
400	5.08	5.15
450	5.06	5.12
500	5.06	5.11
600	5.03	5.08
700	5.02	5.06
800	5.01	5.05
900	5.00	5.03
1000	5.00	5.02
2000	4.97	4.98
3000	4.96	4.97
4000	4.96	4.96
5000	4.95	4.96
10000	4.95	4.95

3.5.3.2.2 Vehicle Shifts Due to Superelevation

Vehicle shifts due to superelevation shall follow the design criteria as defined in Section 3.4.7.1.5. Figure 3-14 indicates how these dimensions relate to the streetcar design vehicle.

3.5.3.2.3 Turnouts

Where a streetcar vehicle travels through the diverging route of a turnout the dynamic outline will be affected. During final design, the dynamic outline shall be checked adjacent to, and 45 feet beyond, all curved components (switches, closure rails) of the diverging turnout route in order to determine potential conflicts with adjacent structures, poles, etc.

3.5.3.3 Horizontal Clearances

For exclusive track, all existing and proposed structures, including catenary poles, bridge pier columns, and retaining walls shall clear the total design vehicle dynamic outline by a distance equal to or greater than the sum of applicable clearances and tolerances defined in this section.

Clearances shall be checked between the design vehicle dynamic outline and all adjacent structures along curved track including the sprials into and out of the curve, tangent track and at turnouts a minimum of 50 feet in either direction of the structures. This is to verify that an adjacent curved track does not affect the clearance in the adjoining tangent section. In addition, Clearance Envelope (CE) shall end 50 feet before a spiral. The full curve CE shall begin 25 feet prior to the circular curve. Similarly, ending 25 feet after the circular curve and 50 feet beyond the spiral. For simple curves, the full curve clearance shall begin 50 feet prior to the point of curvature and end 50 feet beyond the point of tangency. See detail below.

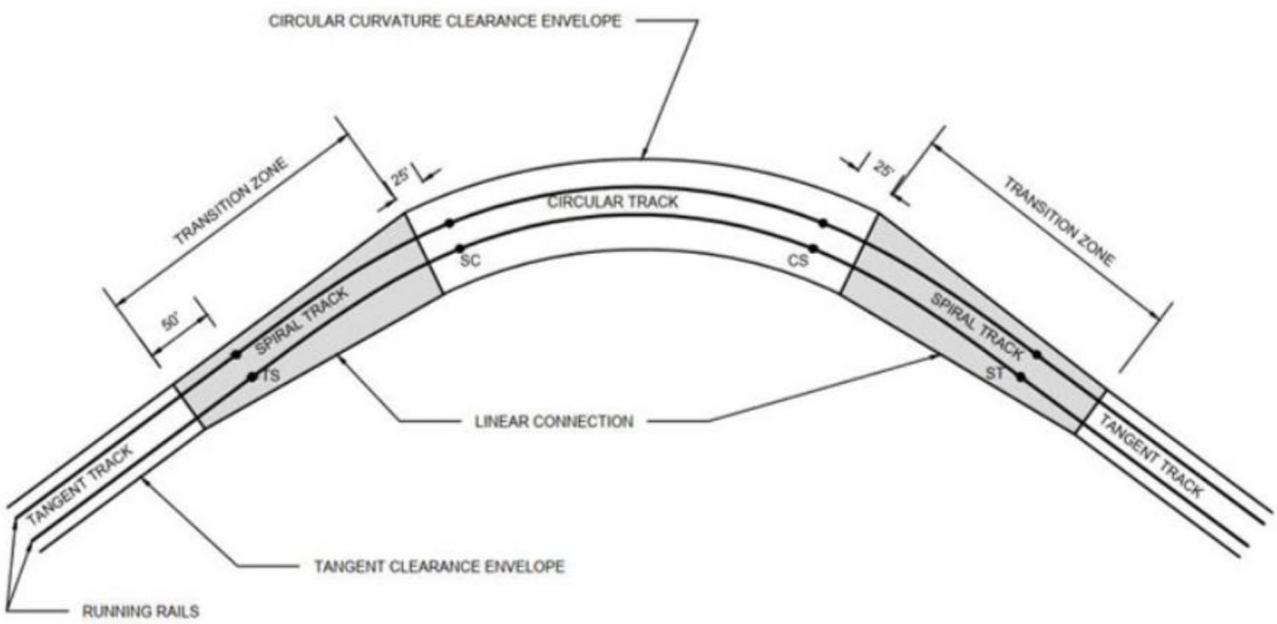

For in-street track with a shared lane, the designer should use the static envelope of the vehicle plus 6 inches to establish traffic striping and lane lines. The desired minimum lane width is 12 feet with an absolute minimum of 11 feet. In order to minimize automobiles driving directly on the rails, the track shall be offset in the shared automobile lane where feasible to keep the rails out of the wheel path of cars driving in the center of the lane. Clearances to all rigid objects and passing streetcar vehicles shall comply with all requirements described for the exclusive track.

3.5.3.3.1 Track Spacing for Exclusive Track

The minimum centerline to centerline distance between two tracks shall be 13 feet where there are center poles. Additional distance may be required where the tracks are curved or superelevated.

3.5.3.3.2 Clearance to Obstructions

The clearance to obstructions shall follow the design criteria as defined in Section 3.4.7.2.1. Exceptions to the design envelope requirements are listed in Section 3.5.3.4.

3.5.3.3.3 Running Clearances

The running clearances shall follow the design criteria as defined in Section 3.4.7.2.2.

3.5.3.3.4 Construction Tolerances along Proposed Structures

The construction tolerances shall follow the design criteria as defined in Section 3.4.7.2.3.

3.5.3.3.5 Track Construction and Maintenance Tolerances

Track construction and maintenance tolerances shall follow the design criteria as defined in Section 3.4.7.2.5.

3.5.3.4 Exceptions to Design Envelope Clearances

All structures installed above the top of the nearest rail shall be set either at or beyond the design envelope with the following exclusions:

- Retaining walls
- Cut sections
- Fill sections
- Safety clearances

See section 3.4.7.4 for more detail.

3.5.3.5 Vertical Clearances

The following minimum vertical clearances are required from the top of the high rail to the underside of any overhead structure, within the horizontal limits of the design envelope:

Table 3-9: Minimum Vertical Clearances for Streetcar Tracks

Trackway Environment	Minimum Height of Overhead Obstruction
Exclusive streetcar track in dedicated rail corridor	18′-0″ plus the depth of the catenary system[1], preferred
	15′-0″ target minimum[2]
	14′-3″ absolute minimum[2, 3]
Streetcar with mixed traffic in same lane or exclusive streetcar track being crossed by roadway at grade	18′-0″ plus the depth of the catenary system[1], preferred minimum[4]
	16′-0″ plus the depth of the catenary system[1], absolute minimum[4]

Notes:

1. Depth of catenary system can vary depending on support system used. Coordinate with OCS designers.
2. Requires special OCS structures and may not be suitable for higher speeds. Coordinate with OCS designers.
3. Vehicle pantograph may be close to its "lockdown" height. Coordinate with vehicle designers and UTA vehicle maintenance staff.
4. Per the National Electrical Safety Code, the trolley contact wire shall not be less than 18′-0″ above the top of any roadway pavement under any condition of loading (including wind and ice loading) or temperature. Exceptions shall be obtained from UTA for any clearance less than that minimum.

These minimum vertical clearances are necessary to ensure safe operations for streetcars on their tracks and to comply with the National Electrical Safety Code. Coordination with OCS designers, vehicle designers, and UTA vehicle maintenance staff is essential to ensure proper clearances are maintained.

END OF CHAPTER 3.

DESIGN CRITERIA MANUAL

/ CHAPTER 4
TRACKWORK

Table of Contents

CHAPTER 4 TRACKWORK 1

4.1 INTRODUCTION 1
4.2 TRACK STANDARDS 1
4.3 COMMUTER RAIL GENERAL 1
4.3.1 Description 1
4.3.2 References 1
4.3.3 CRT Track Standards 2
4.3.4 CRT Track Classification 2
4.3.5 Types of Track 3
4.3.6 Track Materials 3
4.3.7 Special Trackwork 6
4.3.8 Miscellaneous Track Components 6
4.3.9 Fill 7
4.4 LIGHT RAIL/STREETCAR GENERAL 7
4.4.1 LRT Track System 8
4.4.2 Track Types 9
4.4.3 Track Gauge 15
4.4.4 Track Construction Tolerances 16
4.4.5 Traction Power—Impact on Track 17
4.4.6 Signaling and Train Control Impact on Track 17
4.4.7 Ballast, Subballast, and Subgrade 18
4.4.8 Concrete Ties, Timber Ties, and Switch Ties 19
4.4.9 Running Rail 21
4.4.10 Rail Deflection 23
4.4.11 Emergency Guardrail 26
4.4.12 Tie Plates for Timber Ties 27
4.4.13 Special Trackwork Plates for Timber Switch Ties 27
4.4.14 Derails 29
4.4.15 Special Trackwork 29
4.4.16 Switch Machines—Power Operated and Manual 33
4.4.17 Rail Expansion Joints 33
4.4.18 At-Grade Crossings 34
4.4.19 Miscellaneous Track Appurtenances 34
4.4.20 Embedded Track Drains 35
4.4.21 Rail Lubricators 35

CHAPTER 4 TRACKWORK

4.1 Introduction

This chapter details the design standard for trackwork for both Commuter Rail and Light Rail/Streetcar transit for Utah Transit Authority (UTA). While there are numerous similarities in trackwork standards between each mode, there are substantial differences that warrant separate details for each mode within this chapter.

4.2 Track Standards

In addition to the criteria and standards defined in this section, all trackwork shall comply with the minimum standards of the following:

- Utah Transit Authority (UTA)
- American Railway Engineering & Maintenance-of-Way Association (AREMA)
- Association of American Railroads (AAR)
- Federal Transit Administration (FTA)
- Federal Railroad Administration (FRA) (where applicable)
- American Public Transit Association (APTA)

4.3 Commuter Rail General

4.3.1 Description

This section includes criteria for the design of track and track components for the construction and maintenance of UTA Commuter Rail (CRT) trackage. It is also for use in the design of trackage constructed by UTA for use by the Union Pacific Railroad (UPRR) or other railroads, in conjunction with the appropriate railroad company standards. The primary considerations in the design of track are safety, economy, maintainability, and constructability.

4.3.2 References

The primary reference documents applicable to the design of track for this system are the UTA Standard Drawings and Specifications, *Manual for Railway Engineering* (latest revision) published by the American Railway

Engineering and Maintenance-of-Way Association (AREMA), and the Track Standard Drawings (latest revision) of the Union Pacific Railroad.

4.3.3 CRT Track Standards

All new and existing main track and components shall be constructed or upgraded to accommodate passenger train speeds of up to 79 miles per hour (mph) and FRA Class 5 standards. In locations where existing alignment or other restrictions preclude this, trackwork shall accommodate train speeds equal to or in excess of existing speeds.

4.3.3.1 Flange Profile

All trackage shall be suitable for operation of equipment with an Association of American Railroads AAR-1b wheel flange profile.

4.3.3.2 Standard Gauge of Track

The standard track gauge shall be 4 feet 8½ inches measured at a point ⅝ inch below the top of rail, as defined in AREMA.

4.3.3.3 Rail Cant

Running rail shall have an inward cant of 1:40 (toward the centerline of track) except in special trackwork. This cant is provided for with the use of tie plates fabricated for that purpose (timber ties) or cast into the rail seat area (concrete ties). In special trackwork, switch plates, gauge plates, frog plates, and guard rail plates shall provide zero cant.

4.3.4 CRT Track Classification

4.3.4.1 Main Track

Main tracks are defined as tracks extending through yards and between stations, upon which trains are operated by timetable or authority of a train dispatcher, and the use of which is governed by signal indication. Trains are operated in both directions on any single main track.

4.3.4.2 Yard Track

Yard tracks are defined as a system of tracks within defined limits, provided for the making up of trains, storing rolling stock, and other purposes, over which movements not authorized by timetable or by dispatcher may be made, subject to prescribed signals, rules, or special instructions.

4.3.5 Types of Track

4.3.5.1 Ballasted Track

Ballasted track is a track structure composed of rail, rail anchorage, track fasteners, ties, plates, ballast, and subballast constructed over an earth subgrade or on a trough-type bridge deck.

4.3.5.2 Direct Fixation Track

Direct fixation track is a track structure composed of rail and special fasteners for anchorage to a concrete substructure without the use of ties or ballast. It may be used on bridges and aerial structures exceeding 110 feet in length, and in depressed trackway structures in excess of 500 feet in length. It may also be considered for use in other locations where it provides a significant economic benefit compared to ballasted track.

4.3.6 Track Materials

4.3.6.1 Subgrade

The subgrade is the finished surface of the ballasted track foundation, required to provide uniform strength and stability. The ballast section shall be designed based on a maximum acceptable bearing pressure on the subgrade soil of 25 pounds per square inch (psi). The actual soil bearing capacity of the existing ground surface shall be determined by geotechnical testing to verify the actual soil bearing pressure. Where testing reveals that the actual capacity is less than 25 psi, the engineer shall either design a track structure that will not overstress the existing soils or recommend a treatment of the subgrade soils to achieve the minimum capacity cited above.

4.3.6.2 Subballast

Subballast material and construction conforming to the UDOT Specification for Untreated Base Course (UTBC) shall be used on the subgrade to provide a stable surface for track construction. The top surface of the subgrade (or roadbed) shall be sloped to direct water laterally away from the track with a minimum cross slope of 2.0%.

Subballast depth shall be a minimum of 8 inches. The depth shall be verified during final track design and increased, if necessary, to achieve the optimal overall track structure design.

4.3.6.3 Ballast

Ballast material shall be selected in conformance with UPRR specifications and the AREMA *Manual for Railway Engineering*. The ballast section shall provide a 12-inch shoulder of ballast material beyond both ends of the ties. The slope of the ballast section shall be a maximum of 2:1. The ballast depth shall be a minimum of 12 inches, as measured below the bottom of the tie. AREMA ballast gradation 5 shall be used to provide a 2-foot-wide maintenance walkway the length of all switches. The walkway shall be outside of and level with the 12-inch ballast shoulder.

4.3.6.4 Ties

Ties for all ballasted track shall be concrete. Concrete ties shall meet the provisions of the AREMA *Manual for Railway Engineering* (latest revision). For formulas in the Manual for Railway Engineering for concrete tie design (such as Chapter 30), inputs shall include 79 mph for maximum speed and 15 million gross tons (MGT) or less for annual tonnage.

Concrete ties used in all track, except for special trackwork, shall not exceed 13 inches in width, and height shall not exceed 10 inches. Concrete ties shall be nominally spaced no greater than 28 inches on center. Concrete ties shall be used on all turnouts.

Transition ties from standard 8′-3″ ties to 10′-0″ ties shall be used for 12 ties before the beginning and end of each at-grade crossing. The 10′-0″ concrete ties will be placed at 24-inch spacing. The first transition tie past the crossing panel will be retained by a 24-inch end restraint to prevent movement of the crossing panels. 10′-0″ concrete ties at 24-inch spacing will be used for the full length of the crossing.

4.3.6.5 Tie Plates

Tie plates shall meet the requirements of the UPRR Track Standard Drawings.

4.3.6.6 Running Rail

Running rail shall be 115 pounds per yard, Railroad Engineering (RE) section, head hardened for use in curved track with less than a 900-foot radius, or as defined by UTA. Head hardened rail shall be used in accordance with UPRR

Track Standard Drawings. All rail shall be continuously welded, except for bolted joints as required within special trackwork or insulated joints as required for the signal system. 136 pounds per yard running rail may be used as required for special track work and tie-in locations.

Continuous welded rail (CWR) shall be installed and fastened at an appropriate neutral thermal temperature and, where feasible, destressed in accordance with UPRR Track Standard Drawings.

4.3.6.7 Insulated Joints

The use and design of insulated joints (six-hole and glued) shall comply with UPRR Track Standard Drawings.

4.3.6.8 Resilient Rail Fasteners

The use of rail fasteners and their associated appurtenances (such as insulators, tie pads, and shoulder inserts) shall be resilient spring-type, forged from alloy steel bars, and shall comply with the AREMA *Manual for Railway Engineering* (latest revision).

4.3.6.9 Compromise Joints

Where rails of dissimilar weight and cross-section are to be connected, a compromise joint or compromise weld designed and manufactured for that purpose shall be used. The physical properties of the compromise joint shall comply with UPRR Track Standard Drawings.

4.3.6.10 Derails

Sliding derails shall be utilized to prevent out-of-control railroad freight cars or transit vehicles from fouling adjoining or adjacent tracks. Derails should be installed at the downgrade end of yard and secondary track typically used for storing unattended vehicles if the track directly connects to the mainline track and has a descending prevailing grade towards the mainline track.

Derails shall be placed at the 14 feet 0 inches clearance point of all railroad industry tracks connecting to the main track on a downgrade. Derails shall be used at other track locations where they are likely to prevent or minimize injury to passengers and personnel and/or damage to equipment.

Derails shall be situated to derail equipment in the direction away from the main track. The type of derail shall be determined during preliminary engineering and shall be approved by UTA.

4.3.7 Special Trackwork

4.3.7.1 Turnouts

Turnouts shall conform to UPRR standards and shall incorporate curved switch points and railbound manganese frogs, or welded spring manganese frog for #24 turnout. To add stability under turnouts, subballast under the turnout shall be replaced with asphalt cement and graded to drain to the field side of the track. Frog angles of turnouts shall be selected based on the required geometry and the required operating speed. In general, frog angles for turnouts in mainline tracks shall be selected as appropriate for the location, based on the following guidelines:

#9	Yard tracks	10 mph
#11	Yard leads	15 mph
#15	Exit from main track, low speed crossovers	30 mph
#20	Siding turnouts and universal crossovers	45 mph
#24	High Speed Crossover and Turnouts	60 mph
#30	Very high speed crossovers/end of two-main tracks	70 mph

4.3.7.2 Railroad Crossings At-Grade

At-grade crossings shall be constructed of 115 RE rail with railbound manganese frogs in compliance with UPRR Track Standard Drawings. Design of crossovers and turnouts connecting to UPRR main, or spur tracks shall be as approved by UPRR.

4.3.8 Miscellaneous Track Components

4.3.8.1 Bumping Posts

Bumping posts or other fixed devices shall be provided at the ends of single-ended spur tracks to stop trains. On yard tracks, fixed devices suitable for stopping a train operating at a slow speed may be used. Union Pacific Standard Drawing 30 would be acceptable for these applications.

On tracks that may carry trains with passengers on board, a device shall be used which will safely bring the train to a stop in a manner that will minimize personal injury. The deceleration rate shall be limited to 0.3g.

4.3.8.2 Roadway Grade Crossings

Crossings of streets or other at-grade vehicular roadways shall be full depth precast concrete panels with rubber flange fillers designed and fabricated in accordance with UPRR Track Standard Drawings. Grade crossing panels shall be placed on concrete ties and recommended base course and subgrade. At crossings, care shall be taken to provide for proper drainage in the ballast and in the section leading up to the grade crossing by using underdrains or other positive measures. Roadway vertical alignments in approach to the crossing shall be designed per AASHTO Geometric Design of Highways and Streets (latest edition) and shall provide a smooth profile throughout the crossing to minimize impact to the crossing panels and reduce the risk of loss of control by drivers.

4.3.8.3 Guardrails

Guardrail will be installed where mainline track center is at or within 18 feet of piers or structural walls of major bridges and aerial structures, to reduce the likelihood of derailed rail vehicle wheels leaving the track bed. The guardrail can be new or secondhand rail, fastened to the crossties in accordance with UPRR Track Standard Drawings for guardrails. The guardrails shall be continuous for the length of the line of piers or wall and will extend a minimum of 50 feet beyond each end.

4.3.8.4 Rail Lubricators

Automatic train-sensing rail lubricators shall be considered and evaluated for any trackwork with horizontal curve of 500 feet radius or less. In some cases, rail lubricators have reduced significant noise caused by rail transit. Each curve will be evaluated on a case-by-case basis and the decision shall be approved by UTA.

4.3.9 Fill

In locations where new UTA track construction will closely parallel existing railroad track structure and subgrade, and existing side slope is equivalent or steeper than a 3:1 slope, then the interface between the existing and new subgrade is to be key benched at a ratio of 5:1. See Section 5.3.3 for further guidance on fill slopes.

4.4 Light Rail/Streetcar General

This section provides details for the design and construction of the trackwork and its interface with other elements in UTA light rail (LRT) and Streetcar projects.

Trackwork systems are composed of a number of elements, each of which has a definite interaction with other elements of the system. Because of this interaction, the design criteria for trackwork shall be accomplished as a systems approach with a cause-and-effect analysis being undertaken on each of the elements. In performing this trackwork design, consideration of allied factors such as safety, stray current, noise, and vibration shall be considered. In addition, the relationship of trackwork design to the design of other elements of the system, such as train control, traction power, drainage, and the type of vehicle shall be recognized and accommodated early in the design process.

Where the project interfaces with existing freight railroad trackage, the construction shall be coordinated with the owning freight railroad company.

4.4.1 LRT Track System

Three distinct types of track construction are encountered in the LRT system:

- Ballasted track
- Embedded track
- Direct fixation track

In addition, there are four possible conditions in the LRT corridor:

- Corridor exclusively for LRT
- Joint use freight/LRT corridor
- Median running LRT
- LRT running in-street with rubber-tire motor vehicles (mixed flow)

The essential elements of trackwork shall include the following categories:

- Ballasted trackbed
- Embedded track structure
- Direct fixation track structure
- Rail
- Special trackwork
- Rail fastening systems
- Concrete and timber ties
- Cross ties

- Other track materials (OTM)

The design of trackwork and its components shall include consideration of operations, maintainability, reliability, parts standardization and availability, capital costs, and maintenance costs.

4.4.2 Track Types

4.4.2.1 Ballasted Track

Ballasted trackwork shall serve as the standard for at-grade trackwork construction. It shall also be employed for new bridges under 350 feet in length, flanked on both ends by open ballasted sections of track. Ballasted track, with exceptions specified in these criteria, shall be built with continuous welded rail (CWR), which shall be installed and fastened at an appropriate neutral thermal temperature and, whenever possible, destressed. Refer to Figure 4-2 for a typical ballasted double track section in exclusive LRT and shared freight right-of-way, and Figure 4-3b for a typical street-running LRT ballasted track section.

The ballasted track section design shall address the following:

- Ballasted Rail Typical Section.
- Use of restraining rail in sharp radius curves or emergency guardrail on bridges or retained fill.
- Rail fastening and tie plates.
- Railroad ties and layout.
- Electrical resistivity and insulation (stray current).

4.4.2.2 Embedded Track

Embedded track shall be utilized where Light Rail Vehicles (LRVs) share the trackway with rubber-tire vehicles along streets, at street intersections, and at-grade crossings. Continuous welded rail (CWR) shall be employed in embedded track sections, installed and fastened at an appropriate neutral thermal temperature and, whenever possible, destressed. Refer to Figure 4-3a for a typical embedded double track section.

Embedded track design shall consider construction techniques to ensure proper gauge and alignment of the track. It shall also take into account the protection of rail and fastener components from exposure to stormwater and corrosive elements, and provide easy access to rail components for regular maintenance, repair, or replacement. The embedded track design shall address the following considerations:

- Embedded rail typical section.
- Use of restraining rail in sharp radius curves.
- Allowable vertical and lateral rail deflection (track resilience).
- Rail fastening system.
- Drainage of rail fastener cavity or area.
- Mass of embedment concrete required for vibration attenuation.
- Electrical resistivity and insulation.
- Compatibility of track paving material with thermal expansion of rail.
- Minimization of street reconstruction.
- Signal and Traction power track boxes and lids are securely anchored..

A transition structure is required at all interfaces between embedded track and ballasted track to accommodate the change in track modulus between the two systems.

Flangeway gap shall comply with ADA regulations in locations where pedestrians can reasonably be expected to cross the tracks. For mixed traffic lanes, consideration for the flangeway gap shall be given to vehicles with narrow tires, such as bicycles, mopeds, and motorcycles (roadway geometrics, signing, and alternative pedestrian treatments).

The cross slope of the embedded track section in a shared lane configuration shall range from zero to a maximum of one percent.

4.4.2.3 Direct Fixation Track

Direct fixation track shall be employed for trackwork on all bridges or aerial structures with a total span length exceeding 350 feet. Direct fixation track shall be designed to anchor rail fasteners directly into a second pour concrete plinth or pad, constructed using either the bottom-up or top-down method. Concrete plinth or pad designs shall incorporate adequate anchoring to restrain the resultant rail and fastener forces.

Figure 4-1: Direct Fixation Double Track

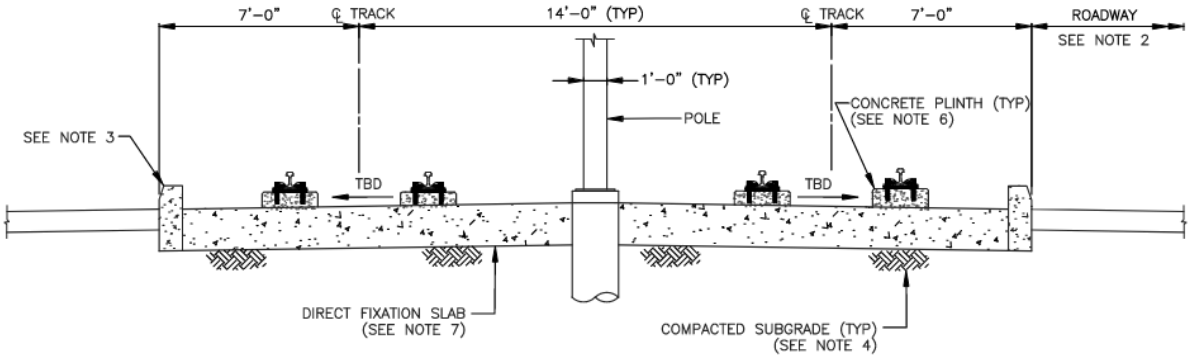

DIRECT FIXATION DOUBLE TRACK

NOT TO SCALE

NOTES:

1. THE SECTION REPRESENTS TYPICAL CONDITIONS. THE SECTION LIMITS FOR EACH AREA OF TRACK WILL BE CONFIRMED IN FINAL DESIGN.
2. ASPHALT AND/OR PORTLAND CEMENT CONCRETE PAVEMENT MATERIAL TO BE PLACED AND COMPACTED CONSISTENT WITH LOCAL JURISDICTIONAL ROADWAY PAVEMENT REQUIREMENTS.
3. CONCRETE CURB, PER JURISDICTIONAL ROADWAY REQUIREMENTS.
4. SUBGRADE TO BE DESIGNED FOR CONCRETE SLAB STABILITY, CONTROL OF DIFFERENTIAL SETTLEMENT AND CONSISTENT WITH UTILITY PROTECTION REQUIREMENTS. GEOTEXTILE FABRIC MAY BE INCLUDED IN FINAL DESIGN WHERE SOIL CONDITIONS DICTATE.
5. DRAINAGE REQUIREMENTS WILL BE PROVIDED FOR IN FINAL DESIGN.
6. PLINTH REQUIREMENTS WILL BE PROVIDED FOR IN FINAL DESIGN.
7. DIRECT FIXATION SLAB REQUIREMENTS AND SLOPE WILL BE PROVIDED FOR IN FINAL DESIGN.
8. CONCRETE REINFORCEMENT REQUIREMENTS WILL BE PROVIDED FOR IN FINAL DESIGN.

Figure 4-2: Ballasted Double Track

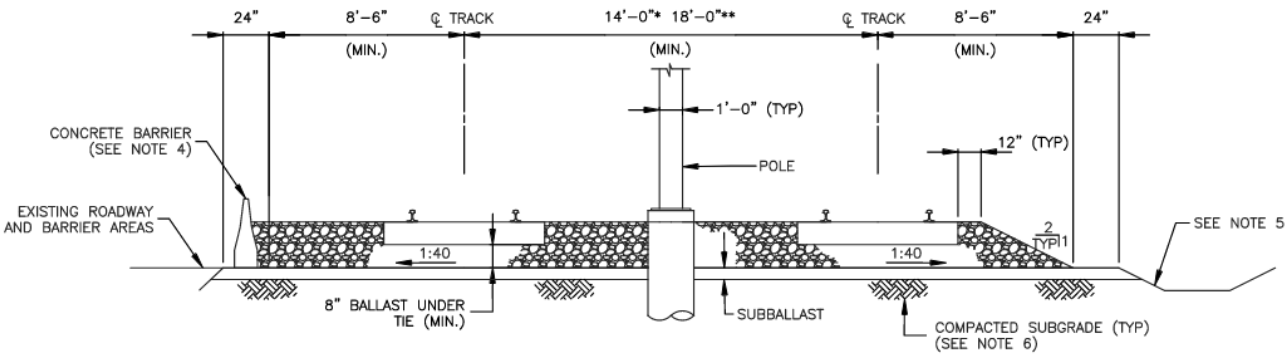

*EXCLUSIVE LRT RIGHT–OF–WAY
**SHARED LRT AND FREIGHT RIGHT–OF–WAY

BALLASTED DOUBLE TRACK

NOT TO SCALE

NOTES:

1. THE SECTION REPRESENTS TYPICAL CONDITIONS. THE SECTION LIMITS FOR EACH AREA OF TRACK WILL BE CONFIRMED IN FINAL DESIGN.
2. ANY TRACKS SHARED WITH FREIGHT SERVICES MUST BE KEPT IN SERVICE DURING LRT CONSTRUCTION.
3. STANDARD RAIL SECTION SHALL BE NEW 115RE EXCEPT IN JOINT OPERATION FREIGHT/LRT CORRIDORS OR ON FREIGHT–ONLY TRACKS. ALL LRT REVENUE SERVICE RAIL SHALL BE CWR. YARD RAIL MAY BE JOINTED.
4. CONCRETE BARRIER WILL BE PLACED IN LOCATIONS ALONG DEDICATED RIGHT–OF–WAY OF SEPARATE LRT TRACKS FROM STREET–RUNNING TRAFFIC. LOCATIONS WILL BE IDENTIFIED ON PLAN AND PROFILE SHEETS. VISUAL SCREENING ON BARRIERS WILL BE CONSIDERED DURING FINAL DESIGN. PLACEMENT OF CONCRETE BARRIER ADJACENT TO A ROADWAY SHALL MEET REQUIREMENTS OF THE AASHTO ROADWAY DESIGN GUIDE (LATEST EDITION).
5. DRAINAGE REQUIREMENTS WILL BE PROVIDED FOR IN FINAL DESIGN. NEED FOR UNDERDRAIN WILL BE ASSESSED AND PROVIDED FOR IN FINAL DESIGN.
6. COMPACTED SUBGRADE SHALL BE FREE–DRAINING MATERIAL GRANULAR IN GRADATION AND COMPACTED WITH AMERICAN RAILWAY ENGINEERING & MAINTENANCE–OF–WAY ASSOCIATION (AREMA) SPECIFICATIONS. COMPACTED SUBGRADE TO BE DESIGNED TO PROVIDE THE STRUCTURAL REQUIREMENTS AND SHIELDING FROM WEATHER AS IDENTIFIED BY AREA SPECIFICATIONS FOR SUBBALLAST. GEOTEXTILE FABRIC MAY BE INCLUDED IN FINAL DESIGN.
7. CROSSTIES MAY BE EITHER TIMBER OR CONCRETE BASED ON COST–EFFECTIVENESS AND AVAILABILITY AS DETERMINED BY FINAL DESIGN. MINIMUM CROSSTIE LENGTH SHALL BE 8'–0".

Figure 4-3a: Street-Running LRT

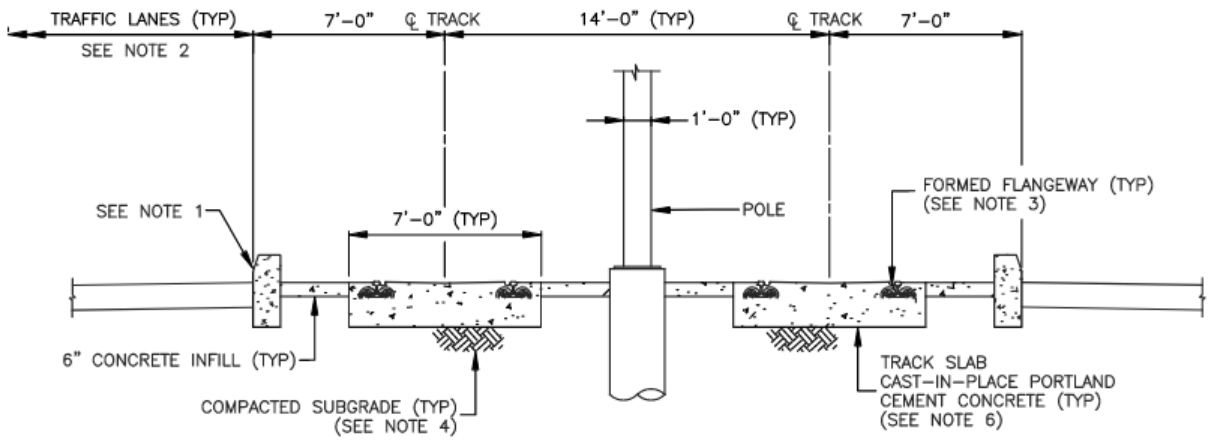

STREET–RUNNING LRT

NOT TO SCALE

NOTES:

1. CONCRETE CURB, PER JURISDICTIONAL ROADWAY REQUIREMENTS.
2. ASPHALT AND/OR PORTLAND CEMENT CONCRETE PAVEMENT MATERIAL TO BE PLACED AND COMPACTED CONSISTENT WITH LOCAL JURISDICTIONAL ROADWAY PAVEMENT REQUIREMENTS.
3. FLANGEWAY TO BE FORMED IN CONCRETE.
4. SUBGRADE TO BE DESIGNED FOR CONCRETE SLAB STABILITY, CONTROL OF DIFFERENTIAL SETTLEMENT AND CONSISTENT WITH UTILITY PROTECTION REQUIREMENTS. GEOTEXTILE FABRIC MAY BE INCLUDED IN FINAL DESIGN.
5. DRAINAGE REQUIREMENTS WILL BE PROVIDED FOR IN FINAL DESIGN.
6. TRACK SLAB THICKNESS AND CONCRETE REINFORCEMENT REQUIREMENTS WILL BE PROVIDED FOR IN FINAL DESIGN.

Figure 4-3b: Street-Running LRT Ballasted Track

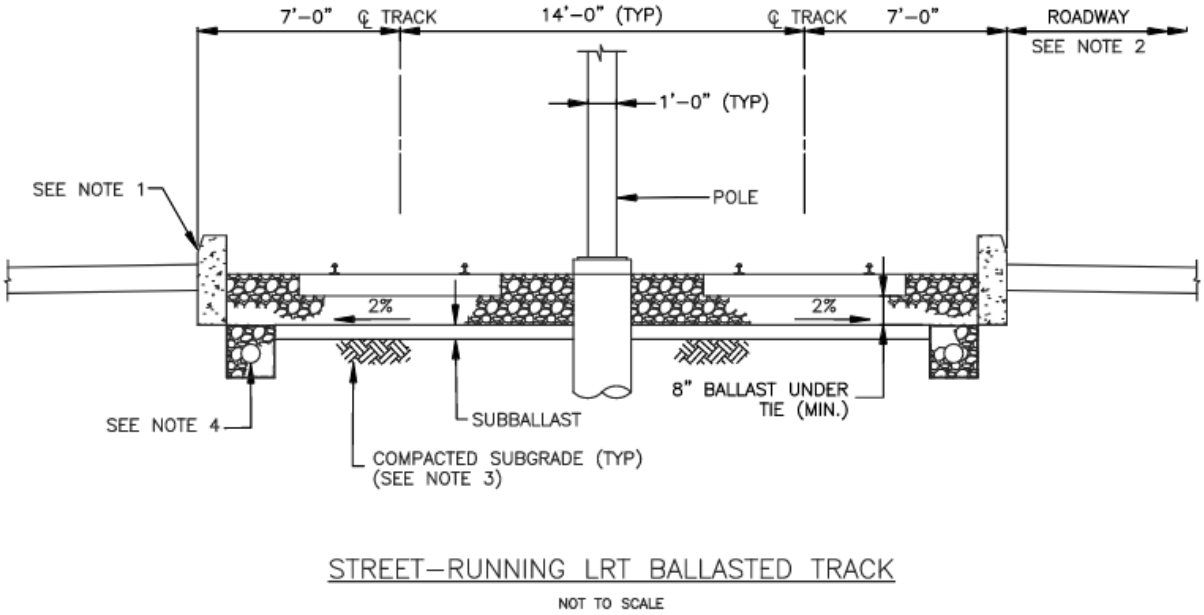

NOTES:

1. CONCRETE CURB, PER JURISDICTIONAL ROADWAY REQUIREMENTS.
2. ASPHALT AND/OR PORTLAND CEMENT CONCRETE PAVEMENT MATERIAL TO BE PLACED AND COMPACTED CONSISTENT WITH LOCAL JURISDICTIONAL ROADWAY PAVEMENT REQUIREMENTS.
3. SUBGRADE TO BE DESIGNED FOR BALLAST STABILITY, CONTROL OF DIFFERENTIAL SETTLEMENT AND CONSISTENT WITH UTILITY PROTECTION REQUIREMENTS. GEOTEXTILE FABRIC MAY BE INCLUDED IN FINAL DESIGN.
4. DRAINAGE REQUIREMENTS WILL BE PROVIDED FOR IN FINAL DESIGN. NEED FOR UNDERDRAIN WILL BE ASSESSED AND PROVIDED FOR IN FINAL DESIGN.

CWR shall be used on direct fixation track and shall be installed and fastened at an appropriate neutral thermal temperature, and whenever possible shall be destressed. Special consideration shall be given to the fixation method of CWR to aerial structures to ensure that longitudinal and lateral rail forces transmitted to the structure are not applied in a manner that could cause damage. The direct fixation track design shall address the following considerations:

- Direct Fixation Rail Typical section
- Use of restraining rail in sharp radius curves or emergency guardrail on bridges or retained fill
- Type of direct fixation track structure
- Rail fastening system
- Electrical resistivity and insulation

A transition structure is required at all interfaces between direct fixation track and ballasted track to accommodate the change in track modulus (track stiffness) between the two systems.

4.4.2.4 Rail Fastener

The direct fixation fastener design shall include the following considerations:

- Type of fastener: spring clip or clamp, or threaded fastener
- Spring stiffness for noise and vibration control
- Longitudinal restraint (fastener slip)
- Rail cant
- Type of anchor bolt assembly
- Vertical and lateral adjustment capability
- Electrical resistivity and insulation properties

4.4.2.5 Concrete Plinth or Pad

The design of the supporting concrete plinth or pad shall include the following considerations:

- Plinth or pad dimensions to suit track alignment and to accommodate restraining rail and/or emergency guardrail where required.
- Interface connection of plinth or pad with elevated structure deck.
- Anchoring to restrain resultant rail forces.
- Elevated structure and rail interaction.
- Drainage of plinths or pads on elevated structure deck.

4.4.3 Track Gauge

Track gauge shall be the standard gauge of 4 feet 8½ inches, measured between the inner (gauge) sides of the heads of the rails at a distance of ⅝ of an inch below the top of the rails. Wider gauges shall be used in some curves, depending on the radius. The gauge of curves shall be as follows:

- Tangent track and curves with radii equal to or greater than 280 feet: 4 feet 8½ inches
- Curves with radii smaller than 280 feet but larger than 200 feet: 4 feet 8¾ inches
- Curves with radii smaller than 200 feet but equal to or larger than 82 feet: 4 feet 9 inches

Gauge widening shall be at a rate of not more than ¼ inch in a distance of 62 feet. Full gauge widening shall be accomplished on the tangent in approach to the point of curve and removed following the point of tangent in non-spiraled curves. In spiraled curves, gauge widening shall be applied and removed over the length of the spirals. If the spiral is too short for full gauge widening to be accomplished without the rate exceeding ¼ inch in 62 feet, sufficient gauge widening shall be placed in the approach tangents to meet the rate of ¼ inch in 62 feet. If adjacent curves requiring widening are too close together to allow run out of the gauge widening, the widened gauge shall be maintained between the curves.

Where widened track gauge is used, the designer shall determine the appropriate flangeway width dimensions for guarded track and for open flangeways in paved track.

4.4.3.1 Wheel Profile and Gauge

Wheels shall conform to the Association of American Railroads (AAR) Mechanical Division wheel standards for a Type 1B "worn wheel" with a wheel gauge of 4 feet 7 $^{31}/_{32}$ inches.

4.4.4 Track Construction Tolerances

Track construction tolerances are determined by taking safety, speed of operation, and the type of service to be provided into consideration (see Table 4-1).

Table 4-1: Track Construction Tolerances

Type of Track	Track Gauge Deviation	Cross Level and Super-elevation Deviation	Vertical Track Alignment		Horizontal Track Alignment	
			Total Deviation	Middle Ordinate in 62' Chord	Total Deviation	Middle Ordinate in 62' Chord
Mainline Ballasted Track	+/– ⅛"	+/– ⅛"	+/– ¼"	+/– ⅛"	+/– ½"	+/– ⅛"
Mainline Ballastless Track	+/– ⅛"	+/– ⅛"	+/– ¼"	+/– ⅛"	+/– ½"	+/– ⅛"
Yard Ballasted Track	+/– $^{3}/_{16}$"	+/– ⅛"	+/– ½"	+/– ¼"	+/– ½"	+/– ¼"

Notes:

1. The rate of change in vertical and horizontal alignment (direction) shall not exceed ⅛ inch per 31 feet of track.
2. Total deviation is measured between the theoretical and actual alignment at any point in the track. Total horizontal deviation in station areas shall be plus 3 inches, minus 0 measured from edge of platform.

Permissible deviation from the established values shall be approved by UTA. The deviations shall be clearly specified in design and construction documents and enforced during construction.

In addition, the design shall be prepared to provide UTA guidance regarding maintenance of the designed track components. This guidance should include the items listed earlier plus allowable wear limits and allowable movements of the various components of the track structure.

4.4.5 Traction Power–Impact on Track

The purpose of the power distribution system is to conduct current from the substation to the vehicle pantograph and return the current to the substation. This system includes all positive power cable, overhead catenary, the negative return system, and various disconnecting devices, all located outside of the substation. The negative return system usually consists of one or more running rails, reinforced by means of negative paralleling cables, if required.

All rail joints (except for insulated joints) shall be electrically bonded. Exothermic cadwelds at these joints or connections are prohibited. Cables shall be through-bolted to web of the rail per AREMA (latest revision), except for the body of a frog.

Appropriate measures shall be taken during the design of all types of trackwork, including embedded track and roadway grade crossings, to minimize the leakage of stray negative return current from the track structure to the ground. This work shall be consistent with system corrosion control requirements (See Chapter 16: Corrosion Control).

Traction power requirements pertinent to track installation shall be indicated on trackwork drawings as a reference.

4.4.6 Signaling and Train Control Impact on Track

Light rail may include both track circuits and wayside inductive loop detector systems to suit both ballasted and embedded track zones, respectively. Impedance bond installation areas and requirements shall be coordinated with the track structure. Insulated joints at limits of track circuits are to be opposite each other (with minimal stagger) to facilitate underground ducting and traction cross-bonding. See Chapter 13 of this manual for additional information.

Signaling and train control requirements pertinent to track installation shall be indicated on trackwork drawings as a reference.

4.4.7 Ballast, Subballast, and Subgrade

The design of the ballasted track section shall ensure an adequate foundation for minimizing system maintenance requirements. The trackbed foundation and ballasted sections shall be designed to fit within the allotted corridor width and to provide a uniform, well-drained foundation for the track structure.

The ballast section design shall include an analysis of the pressures exerted on the ballast elements due to the rail forces transmitted by the LRV or freight vehicle. These forces shall be calculated based on the gross dynamic wheel load of the LRV or freight car, track modulus, effective bearing area of cross tie, and assumed soil bearing capacity of the subgrade as defined herein. The combined depth of the ballast and subballast is calculated as a single unit and shall be determined by the formula:

$D_{BALLAST} = [16.8\ P_A / P_C]^{0.80}$ (Reference: AREMA 2.11.2.3.b)

Where:

$D_{BALLAST}$ = Minimum ballast depth (in inches)
P_A = Maximum allowable tie load (85 psi concrete ties, 65 psi timber ties)
P_C = Soil bearing pressure (in psi)

4.4.7.1 Subgrade

The subgrade is the finished surface of the ballasted track foundation and is required to provide uniform strength and stability. The ballast section shall be designed based on a maximum acceptable bearing pressure on the subgrade soil of 25 psi. The actual soil bearing capacity of the existing ground surface shall be determined by geotechnical testing to verify the actual soil bearing pressure. Where testing reveals that the actual capacity is less than 25 psi, the engineer shall either design a track structure that will not overstress the existing soils or recommend a treatment of the subgrade soils to achieve the minimum capacity cited above.

4.4.7.2 Subballast

A subballast layer consisting of a well-graded and compacted aggregate shall be placed on top of the finished subgrade in accordance with the dimensions shown on the ballasted track typical section. This layer can be

included as part of the overall ballast depth required for the given loads and subgrade bearing pressure. Subballast material shall conform to UTA Standard Specification for Untreated Base Course, or equivalent.

4.4.7.3 Ballast

Ballast is a selected crushed and graded hard aggregate material placed upon the subballast to provide support for the rail and ties, and to distribute the track loadings to the subgrade. AREMA states ballast (plus subballast) shall be of sufficient depth to distribute pressure between tie and subgrade. Ideal tie to ballast bearing pressures are 65 psi for timber ties and 85 psi for concrete ties. The ballast shall sustain and transmit static and dynamic loads in three directions (transverse, vertical, and longitudinal), distributing them uniformly over the subgrade. A major function of the ballast is to drain the track system. The ballast holds the track in proper alignment, cross slope, and grade, and permits adjustment and revision of these features. The gradation shall provide the means to develop the stability and density requirements for the ballast section and provide necessary void space to allow proper runoff of stormwater. Existing track embankments shall be investigated to determine conditions and soundness for reuse.

Ballast gradation shall conform to AREMA size 4A. In the yard area and industry spurs, AREMA size 4A ballast may be used.

AREMA ballast gradation 5 shall be used to provide a 2 feet wide maintenance walkway the length of all switches. The walkway shall be outside of and level with the 12-inch ballast shoulder.

Figure 4-1 indicates the minimum depth of ballast under the ties of 8 inches, a 12-inch ballast shoulder beyond the ties, and a minimum 2:1 ballast slope.

4.4.8 Concrete Ties, Timber Ties, and Switch Ties

4.4.8.1 Concrete Ties

Concrete ties shall be used on ballasted track sections along the mainline and yard tracks, except at special trackwork. Concrete ties may be used at special trackwork if cost-effective.

Concrete ties shall consist of prestressed monoblock concrete tie designed in accordance with the most current version of AREMA *Manual for Railway Engineering* and current ACI 318 design procedures. In addition to inserts for traffic rail fastening clips, concrete ties shall be designed with anchorage points for restraining rail and/or emergency guardrail as may be required. Rail seat areas shall be canted at 1:40. The rail clip design shall provide

proper longitudinal and lateral restraint to the welded rail and also incorporate electrical insulating elements to minimize the transmission of stray traction power currents and assure the proper operation of signal system track circuits.

The concrete tie design shall address the following considerations:

- Rail seat positive and negative loads.
- Tie center negative load.
- Prestressing tendon bonding strength.
- Compressive strength of concrete at 28 days.
- Prestressing steel strength.
- Result in an acceptable tie bearing pressure on the ballast, assuming that track loading is applied to not more than ⅔ of the tie's footprint.
- Electrical isolation of the rails from ground and from each other.

4.4.8.2 Timber Ties

Timber ties shall be used where appropriate on ballasted track sections at special trackwork and along freight railroad industrial spurs. Timber ties may be used in mainline and yard track sections if required for specific purposes where concrete ties are impractical.

Timber ties shall consist of "7-inch grade" ties meeting the requirements of the most current version of AREMA *Manual for Railway Engineering* and the specifications of the Railway Tie Association and the American Wood Preservation Association.

Timber tie design shall address the following considerations:

- Rail seat positive and negative loads.
- Tie center negative load resulting in an acceptable tie bearing pressure on the ballast, assuming that track loading is applied to not more than ⅔ of the tie's footprint.
- Wood species and preservation method.
- Electrical isolation of the rails from ground and from each other.

4.4.8.3 Switch Ties

Switch ties for special trackwork in ballasted sections shall consist of either concrete or timber ties produced from durable hardwoods such as beech, birch, hard maple, ash, and oak and designed to the standards for timber ties defined above. Tropical hardwoods such as azobe that are often used without preservative treatment may be used with the approval of the UTA. If azobe is to be used, a certification shall be made that it is of the type Lophira alata (common names Ekki and Bongossi) and that the wood was identified as such prior to processing. Use of the azobe wood Lophira pecora is not allowed. The timber sizes and spacing shall vary as required to provide continuous support between tracks at turnouts and crossovers.

Switch tie spacing in special trackwork shall meet the requirements of the specific turnout geometry. Switch tie lengths shall be selected such that no tie is spiked within 12 inches of its end. Interwoven switch ties are not acceptable, and switch ties longer than 16 feet shall be provided where necessary to avoid interwoven ties and to avoid spiking ties too close to the tie ends.

Switch ties shall provide for electrical isolation of the rails from ground and from each other.

4.4.9 Running Rail

The standard 115 RE rail section shall be used for all track sections except in joint operation freight/LRT corridors or in freight-only tracks. In tracks used by freight railroads, the rail section selected shall be as approved by the rail freight operator. Where freight railroad operations share tracks with LRT, a rail section heavier than UTA's standard 115 RE section that has a moment of inertia not less than 85 in^4 shall be used. In any such case, the Union Pacific standard 136 RE rail section shall be used wherever possible to minimize UTA maintenance inventories. Exceptions will be allowed only in the event that a different rail section is required by the railroad freight operator. Each such case shall be justified and submitted to UTA for acceptance.

All new rail shall meet the current requirements of the most current version of AREMA *Manual for Railway Engineering* for steel tee rail.

Secondhand rail that meets the AREMA classifications for No. 1 relay rail may be used in LRT yard tracks. Industrial spur tracks that are not used for freight operations shall be 115 RE.

All running rails in track used for LRT operations shall have joints between adjoining rails welded by either the flash butt pressure welding method or the exothermic thermite method. Rails shall be shop welded by the flash butt welding process into the longest lengths feasible for delivery to the site and installation. Thermite rail welding

shall only be used to connect contiguous CWR strings and to weld in shop curved rails and in special trackwork locations where flash butt welding is impractical.

All running rail shall be surface ground to remove all small imperfections and to mill any scale prior to track being used for service. This procedure is required to help prolong the life cycle of the rail and to promote a smooth and quiet riding surface.

All rails on curves with a radius less than 300 feet shall be pre-curved in a shop using either roller bending or gag-press methods. Joints in pre-curved rails shall be by either thermite welding or bonded joint bars.

4.4.9.1 Standard Carbon Steel Rail

Running rails on all primary tracks shall be standard carbon steel rails, minimum 300 Brinell hardness, manufactured in accordance with the latest edition of the AREMA *Manual for Railway Engineering*.

4.4.9.2 High Strength Rail

High strength rail shall be used at all areas anticipated to have a high frequency of acceleration and braking, on steep grades 5% or greater, throughout special trackwork limits, and in mainline track curves with radii of 900 feet or less. This includes the full length of the track at the platforms, plus 45 feet at either end of the platform. High strength rail shall be head hardened.

Where high strength rail is used in circular curves with spirals, the high strength rail shall, at a minimum, extend from the point of tangent-to-spiral to the point of spiral-to-tangent. In the case of spirals with lengths that are less than 32 feet, the high strength rail shall continue into the tangent track a distance that is the greater of those determined from the following:

- No less than 32 feet from the point of spiral-to-curve or curve-to-spiral.
- No less than 32 feet from the point where the instantaneous radius of the clothoid spiral is equal to 300 feet.

Where high strength rail is used in two sections of track connected by a section with standard rails spaced less than 150 feet, high strength rail shall be used continuously through the connecting section.

4.4.9.3 Continuous Welded Rail

All mainline track shall be designed to use continuous welded rail wherever possible. The resulting spacing of rail fasteners on embedded and direct fixation track, and tie spacing on ballasted track shall be designed based on principles of continuous welded rail forces as described herein.

4.4.10 Rail Deflection

Rail deflection shall be limited to 1/8 inch based on the maximum of the deflection value calculated based on a single wheel and a two-wheel load.

Maximum deflection shall be calculated by the formula:

$$Yo = P / (64\ E\ I\ \mu^3)^{0.25}$$

Where:

Yo	= Maximum deflection (in inches)
P	= Dynamic wheel load (in pounds)
E	= Modulus of elasticity of rail steel (30×10^6 psi)
I	= Moment of inertia of specified rail section (in^4)
μ	= Track modulus

The track modulus shall be approximated based on a static condition by the formula:

μ = fastener spring stiffness (lbs/in) / fastener spacing (in)

4.4.10.1 Maximum Bending Stress

The maximum bending stress in the rail shall not exceed 25,000 psi, based on the yield point of rail steel of 70,000 psi. The bending stress shall be calculated by the formula:

$$Sb = Mo\ c / I$$

Sb = Maximum bending stress (in psi)

Where:

Mo	= $P (E I / 64 \mu)^{0.25}$ (maximum bending moment)
P	= Dynamic wheel load (in pounds)
E	= Modulus of elasticity of rail steel (30 x 106 psi)
I	= Moment of inertia of specified rail section (in^4)
μ	= Track modulus
c	= Distance from rail base to neutral axis (in inches)

4.4.10.2 Axial Tensile and Compressive Forces

The maximum axial tensile force shall be calculated based on the highest anticipated temperature drop of the rail below the zero thermal stress temperature. The maximum axial compressive force shall be calculated based on the highest anticipated temperature rise of the rail above the zero thermal stress temperature. An allowance should be made for a zero thermal stress tolerance of plus or minus 10°F. Additional consideration shall be given to the magnitude of axial forces due to acceleration and braking.

4.4.10.3 Rail Break Forces

Broken rail forces refer to the forces transferred to the structure in longitudinal shear by the rail fasteners where a rail break or pull-apart occurs. The pull-apart force is resisted by both the structure frame and the unbroken rails on the structure. The distribution of the broken rail forces on the structure is site and structure specific. The most probable location of a rail break, other than at weld locations, is in the vicinity of an expansion joint of the supporting structure, as the tensile stress of the rail is at its maximum at this location. After a rail break occurs, the rails adjacent to the point of break will separate, creating a gap until the cumulative restraints developed by the rail fasteners are sufficient to resist further movement. As the rail slides through the fasteners, the force in the rail near the point of rail break reduces to zero. The forces in both the rail and structure will then increase as the rail continues to move until maximum longitudinal restraint is achieved. The resulting rail pull-apart gap and forces shall be calculated based on extreme conditions, with the highest temperature drop and the lowest restraint capabilities of the fastener.

In curved track sections, the lateral deflection of a broken rail due to the centrifugal force of the vehicle shall be considered in determining the minimum required spacing of the fasteners in curves. A maximum offset of ⅛ inch is considered the allowable safe limit for a rail break, based on the calculated deflection due to the application of the lateral wheel load on the free bending of non-precurved rail.

When applying the restraint loads to the rail and structure, it is important to note that the sum of all restraint forces within the region of rail movement should be applied to the structure during the broken rail analysis. The unbalanced force from the broken rail is resisted by both the unbroken rails and the guideway support system, in proportion to their relative stiffness. It is also important to consider the twisting forces and lateral forces created by broken rail conditions.

4.4.10.4 Unbalanced Thermal Forces at Special Trackwork

Unbalanced rail thermal forces exist at special trackwork locations due to discontinuities in the rail. Standard turnout units are not designed to transfer high rail forces through the units in aerial structures without causing misalignment and consequent wear and tear. The direct fixation track design shall include a proposed method for creating a zero-force condition through the special trackwork unit by dissipating the rail forces into the superstructure.

As a result, the substructure will need to be designed to compensate for these induced forces, and the design shall consider the following:

- The special trackwork units within the limits of the elevated structure will move with the structure. Where the structure moves, it is assumed that the special trackwork will move relative to the structure, and that internal stresses developed within the special trackwork will be accommodated by the use of anti-creep devices in the baseplates of the special trackwork.
- The special trackwork units shall be positioned at the mid-span of the frame structure and away from structural expansion joints to reduce the number of stresses induced into the structure during expansion or contraction. The structure shall consist of a continuous span structure, where practicable.

4.4.10.5 Use of Rails and Other Track Material from Existing Tracks

Some of the existing rail can be used for freight-only purposes, including sidings, tie-ins, and yard and team tracks. All reused rail should conform to AREMA standards for #1 grade relay rail.

4.4.10.6 Restraining Rail and Strap Guard for Curved Track

All tracks with a centerline radius of less than or equal to 300 feet shall have restraining rail added to the inside running rail to reduce rail wear on the outside rail. This reduced wear results from the division of lateral loads between the high rail of the curve and the working face of the restraining rail. Restraining rails also decrease the possibility of derailments attributable to the leading outside wheel climbing the outside rail since the assumption

of some lateral load by the restraining rail reduces the lateral load/vertical load ratio. Restraining rail shall also be considered for any track where there is a possibility that the unbalanced superelevation (Eu) may be greater than 4 inches under reasonably expected operations.

Restraining rail shall normally be vertically mounted tee rail that has been pre-curved and pre-drilled for installation at a specific location. Assembly to the matching CWR may either be made in the fabricating shop or by field fitting with running rail that is drilled in the field.

On circular curves with spirals, the restraining rail assembly shall extend at least from the point of tangent to spiral to the point of spiral to tangent. In the case of spirals with lengths less than 32 feet, the restraining rail shall continue into tangent track a distance that is the greater of those determined from the following:

- No less than 32 feet from the point of spiral to curve or point of curve to spiral.
- No less than 32 feet from the point where the instantaneous radius along the spiral is equal to 300 feet.

The flared flangeway area at the end of a segment of restraining rail shall not be counted as an effective segment of restraining rail in determining the required overall length of restraining rail to be used. Flared portions of the restraining rail flangeway shall be at least as long in inches as the allowable track speed in miles per hour, with a minimum flare length of 12 inches.

4.4.11 Emergency Guardrail

Emergency guardrail shall be used to restrain the lateral movement of derailed rail vehicle trucks on all bridges, retained fills and their approaches, and other locations where the result of a derailment could be particularly catastrophic. Emergency guardrail is not required in embedded track areas or in locations where it would interfere with special trackwork features.

Emergency guardrail shall ordinarily be fabricated from used rail. In direct fixation track and other locations where advantageous, emergency guardrail may be fabricated from a structural angle or tee section of appropriate size.

On single track structures or for a single track located on retained fill, guardrail shall be installed adjoining both running rails. For double track, one guardrail is required for each track, and it shall be located inside the running rail farthest from the edge of the structure or retaining wall. For more than two tracks, guardrail shall be installed on the track(s) nearest to the edge(s) of the structure.

The rail shall be installed inside the running rail furthest from the edge of the structure. On main tracks, the guardrail shall extend 100 feet ahead of the beginning of the bridge structure or area being protected on the approach end. The guardrail shall extend 50 feet beyond the end of the protected structure on the departure end, and 100 feet beyond each end on bi-directional tracks. Guardrail extensions may be half these distances on tracks operated at 20 mph or less.

4.4.12 Tie Plates for Timber Ties

If timber ties are used for LRT revenue track, an elastic fastening system shall be used that provides sufficient longitudinal restraint to preclude the use of rail anchors. Tie plates shall be secured to the cross ties with lag screws. To deter the transmission of stray currents to the ballast section, all portions of the tie plate shall be insulated from the tie.

The standard rail fastening for timber ties in freight-only track shall consist of standard AREMA tie plates with cut spikes and rail anchors. This fastening system may be used in LRT yard track, provided that corrosion control studies document that the traction power system for the yard can be grounded.

4.4.13 Special Trackwork Plates for Timber Switch Ties

Ballasted special trackwork for mainline alignments shall be insulated plate equipped with elastic rail clips to provide stray current isolation in accordance with the criteria determined by the traction power and stray current engineers.

4.4.13.1 Insulated Joint Bars

Insulated joints shall be provided wherever required for proper operation of the signaling system or where required to isolate one section of track from the traction power negative return circuit.

Where insulated joints are provided for signaling purposes, the signaling system shall include impedance bonds to provide a continuous path for traction negative power return current. See Chapter 13 for impedance bond requirements.

All insulated joints should be located as suspended joints to obviate the need for insulated tie plates, a high maintenance item.

Insulated joint bars of the epoxy bonded type shall be used in CWR wherever it is necessary to electrically isolate contiguous rails from each other to comply with track signaling or traction power criteria. Track bolts shall be equipped with self-locking nuts.

Wherever insulated joint bars are required in track constructed with jointed rail, or where insulated joints are required in a traffic rail equipped with restraining rail, they shall be polyurethane encapsulated bolted insulated joints.

4.4.13.2 Bonded Joint Bars

Except for tracks designated for jointed rail construction, bolted joints shall only be used between welded rail strings of different chemical compositions or metallurgies. These joints shall be epoxy bonded and fastened with high-strength bolts. They shall be electrically bonded to provide a continuous path for traction power negative return current and signal circuits, and comply with the following parameters:

- Identical drilling pattern as standard joint bar
- Compatible with the standard direct fixation rail fasteners
- Comply with the general requirements of a rail joint as defined by the most current version of AREMA Manual for Railway Engineering

Flash butt welds shall be used wherever possible to join rail of different chemical composition or metallurgy.

4.4.13.3 Joint Bars

During design, the use of bolted joints shall be minimized, except in locations where jointed rail is specified. These joint bars shall be standard AREMA 36-inch, six-hole for main track, and 24-inch, four-hole for secondary and yard track. Track bolts, nuts, and lock washers shall conform to AREMA standards.

4.4.13.4 Compromise Joint Bars

Compromise joint bars shall be used to connect rails of dissimilar sections wherever field welding is infeasible, or the connection is temporary. However, wherever possible, thermite-type field welds shall be used for permanent connections between dissimilar rail sections.

4.4.14 Derails

Sliding derails shall be utilized to prevent out-of-control railroad freight cars or transit vehicles from fouling adjoining or adjacent tracks. Derails should be installed at the downgrade end of yard and secondary tracks typically used for storing unattended Light Rail Vehicles (LRVs) if the track directly connects to the mainline track and has a descending prevailing grade towards the mainline track.

Derails shall be positioned at the 14 feet 0 inches clearance point of all railroad industry tracks connecting to the main track on a downgrade. Derails shall be used at other track locations where they are likely to prevent or minimize injury to passengers and personnel and/or damage to equipment.

Derails shall be situated to derail equipment in the direction away from the main track. The type of derail shall be determined during preliminary engineering and shall be approved by UTA.

4.4.15 Special Trackwork

"Special trackwork" refers to the trackwork units required where tracks converge, diverge, or intersect. Special trackwork includes turnouts, crossings, and crossovers, individually or in combination. All special work design shall be based on AREMA standards, except where modified to accommodate specific conditions.

Special trackwork shall be designed and constructed following the relevant UTA Reference Drawings. Standard turnouts and crossovers shall be located in ballasted track only. Embedded special trackwork shall be custom designed to suit the location.

No trackwork design or construction unit limits shall be located within a special trackwork unit.

Special trackwork shall be placed in tangent horizontal track. Any special trackwork located in a horizontal curve shall receive prior approval from UTA. No superelevation shall be present in special trackwork units. All special trackwork shall be positioned on tangent vertical profile grades.

Turnouts provide connections to branch lines, end double tracks, yards, and industry tracks. Crossovers consist of two turnouts set up to enable traffic to move from one track to another, typically parallel track. Where a pair of crossovers is required, it should be set as two single crossovers if possible. If this is not possible, a double crossover may be used with UTA's approval.

The size or "number" of the turnout or crossover selected depends upon its purpose, train speeds, and geometric constraints. The normal and maximum operating speeds through the various turnouts designated for use on the project are shown in Table 4-2.

Table 4-2: Turnout Operating Speeds (mph)

Turnout Number	Maximum (3" Eu)	LRV	Freight
6	14	10	Not used
8	19	15	10
10	24	20	15
15	37	30	25
20	50	45	35

For design purposes, the normal operating speed shall be used. The usual assignment of turnouts is given in Table 4-3.

Table 4-3: Application of Turnouts

Turnout		Service
Frog	Switch	
6	13′-0″	Minimum for LRT yard tracks
10	19′-6″	Minimum mainline track turnout Permanent turnbacks preferred where possible in yard
20	39′-0″	Ends of double track or mainline junctions Preferred turnout

Special turnout designs, such as curved frog turnouts and equilateral turnouts, may be advantageous at specific locations. In any case, the justification for the design shall be documented, and the special design shall not be used without UTA's approval.

The required separation distances between points of intersection for various combinations and directions of turnouts are shown in Tables 4-4 to 4-6. These values may change depending on the final determination of LRV characteristics.

Table 4-4: Point-to-Point Turnouts, Either Hand

Turnouts	Desirable	Point-to-Point Distance (feet)	
		LRT only (min.)	LRT and Freight (min.)
# 6 into:			
# 6	102.50	77.50	87.50
# 8 w/ 13′-0″ switch	101.67	76.67	86.67
# 8 w/ 19′-0″ switch	112.25	87.25	97.25
# 10	112.67	87.67	97.67
# 10 into:	122.83	97.83	107.83
# 10	133.58	108.58	118.58
# 15	152.46	127.46	137.46
# 20			
# 20 into:	182.08	157.08	167.08
# 20			

Table 4-5: Frog-to-Point Turnouts, Same Hand

Leading Turnout	Trailing Turnout	Frog-to-Point Distance (feet)		
		Desirable (14′-0″ Center or Clear Tie Sets)	12′-6″ Center or Clear Tie Sets	Minimum*
# 6	# 6	84.58	75.52**	77.42
	# 8 w/ 13′-0″ switch	**	**	76.58
	# 8 w/ 19′-6″ switch	**	**	87.17
	# 10	**	**	87.58
# 10	# 10	140.35	125.31	109.25
	# 15	122.50	122.50	120.00
	# 20	141.38	141.38	138.88
# 20	# 20	280.18	250.16	203.38

* Based on 19-inch rail (13′-0″ with # 6 and # 8 w/ 13′-0″ switch) between frog and stock rail. Will require curve beyond heel of switch in lead turnout to provide clearance.

** Do not use, because value is less than minimum.

Table 4-6: Frog-to-Point Turnouts, Opposite Hand

Leading Turnout	Trailing Turnout	Frog-to-Point Distance (feet)	
		Desirable (Clear Tie Set)	Minimum*
# 6	# 6	**	77.42
	# 8 w/ 13′-0″ switch	**	76.58
	# 8 w/ 19′-6″ switch	**	87.17
	# 10	**	87.58
# 10	# 6	101.58	100.33
	# 8 w/ 13′-0″ switch	100.75	99.50
	# 8 w/ 19′-6″ switch	111.33**	116.08
	# 10	111.75**	116.50
	# 15	122.50**	127.25
	# 20	141.38**	146.13
# 20	# 8 w/ 19′-6″ switch	206.33	173.33
	# 10	206.75	173.75
	# 15	217.50	184.50
	# 20	236.38	203.38

* Based on 19-inch rail (13′-0″ with # 6 and # 8 w/ 13′-0″ switch) between frog and stock rail. Will require curve beyond heel of switch in lead turnout to provide clearance.

** Do not use, because value is less than minimum.

Special trackwork shall be located to minimize or eliminate pedestrian exposure to operating mechanisms and open flangeways. Pedestrian crosswalks shall not be located across switches, frogs, and crossing diamonds. Switches shall be positioned away from areas of vehicular traffic to avoid the need for special tongue switch designs and to enhance the safety of UTA employees engaged in switch maintenance.

Special trackwork geometry and details should avoid or minimize any requirements for special catenary and signal structures.

Since all special trackwork is a source of noise and ground-borne vibration, its proposed location shall be determined with due consideration given to those factors.

Special trackwork shall be designed for welded joint installation, except at insulated joint locations. Where bolted joints in special trackwork are unavoidable, the joints shall be configured to permit epoxy bonding of “D-bar” type

joint bars. Turnouts to industrial sidings shall be partially welded installation, eliminating bolted joints along the mainline traffic rails.

Running surfaces in special trackwork shall provide a minimum hardness of Brinell 320.

During the design of special trackwork, provisions shall be made for the installation of "Calrod" tube type switch heaters. All switches shall be designed to accommodate switch heaters, regardless of the specific installation's location within the system or the need for switch heaters at that location. All power-operated switches shall be equipped with switch heaters at the time of initial construction, and provisions shall be made for switch heater installation on all manual switches.

Where possible, switches in embedded track shall be of the common AREMA split switch design. Such switches shall be enclosed in a suitable, robustly constructed housing that permits the operation of rubber-tired vehicles anywhere in the switch area. Tongue switches shall not be used unless approved by UTA.

4.4.16 Switch Machines–Power Operated and Manual

Switches may be operated by power operated switch and lock movements, electrically locked hand-operated machines, or hand-operated trailable switch stands, depending on the location and purpose of the switch. Selection of a switch operating device and the space requirements for such devices shall be coordinated with design of the signal system and Chapter 13.

4.4.17 Rail Expansion Joints

Where thermal forces in the rail cannot be restrained and rail expansion and contraction shall be accommodated, rail expansion joints shall be provided. Examples include existing structures that need protection from longitudinal rail force transfer and bridge expansion dams where rails are embedded in the surface of a paved roadway bridge. If the amount of rail movement to be accommodated is 2 inches or less, or if the joint is located in a paved bridge deck, a mitered design expansion joint may be used. For rail expansion exceeding 2 inches, open track rail expansion joints of the sliding rail type shall be provided.

Where rail expansion joints are provided in paved track, provisions shall be made for inspection and maintenance of the joints. The joint housing shall include drainage provisions to flush away stormwater and debris entering the joint.

4.4.18 At-Grade Crossings

At-grade street crossings shall be embedded track. A rubber boot shall be utilized through the entire length of the crossing to electrically isolate the rail. Vertical alignment of the roadway approach to the crossing shall be designed per AASHTO Geometric Design of Highways and Streets (latest edition) and shall provide a smooth profile throughout the crossing to minimize impact to the crossing track and reduce the risk of loss of control by drivers.

At-grade crossings of yard and secondary track shall be designed to minimize stray currents. Refer to Chapter 16 for stray current control strategies.

4.4.19 Miscellaneous Track Appurtenances

4.4.19.1 Buffer Stops

Buffer stops shall be used at all stub ends of tracks to stop an LRV in the event of mechanical failure of the braking system or human error. The buffer stops shall be designed to engage the vehicle anticlimber without contact with the vehicle coupler and limit vehicle body damage for the anticipated operating speed.

The buffer stop design shall be based on the energy absorption capacity of the friction elements required to stop an LRV based on the following parameters:

- Kinetic energy of a 4-car LRV consist (AW3 loading) at 10 mph
- Slide area gradient < 1.5%
- Maximum deceleration rate < 1.0 g
- Force limit imposed by shock absorbers < vehicle buff load

The buffer stop design shall define the following elements:

- Main frame and slave frame steel strength
- Buffer shoes and hardware
- Frame hardware
- Shock absorber head and attachment hardware
- Welding procedure
- Paint thickness and durability
- Field installation and repair procedures

4.4.20 Embedded Track Drains

The flangeways provided for light rail vehicle wheels in embedded track form natural conduits for stormwater runoff. To prevent the formation of ponds and icing at low points of sag vertical curves, track drains shall be used. Drains shall also be placed at appropriate intervals along grades to prevent flangeways from overflowing. A track drain shall be placed on the downgrade end of all embedded track adjoining ballasted track or direct fixation track to minimize fouling of the track ballast with street debris. Similarly, a track drain shall be provided at the downgrade end of any embedded track segment abutting a segment of direct fixation track to prevent street debris from creating housekeeping problems in the direct fixation track area. Other locations where the use of track drains may be appropriate shall be identified during final design.

4.4.21 Rail Lubricators

Automatic train-sensing rail lubricators shall be considered and evaluated for any trackwork with a horizontal curve of 500 feet radius or less. In some cases, rail lubricators have reduced significant noise caused by rail transit. Each curve will be evaluated on a case-by-case basis, and the decision shall be approved by UTA.

END OF CHAPTER 4.

DESIGN CRITERIA MANUAL

/ CHAPTER 5
CIVIL WORK

Table of Contents

CHAPTER 5 CIVIL WORK 1

5.1 General 1
5.2 Surveying and Mapping 1
5.2.1 Survey Control System 1
5.3 Roadway Elements 2
5.3.1 General 2
5.3.2 Applicable Standards 3
5.3.3 Grading 3
5.3.4 Traffic Lane Widths 3
5.3.5 On-street Parking 4
5.3.6 Curbs, Wheelchair Ramps, and Curb Cuts 4
5.3.7 Sidewalks and Park Strips 4
5.3.8 Driveways 5
5.3.9 Paving 5
5.4 Bus Facilities 6
5.4.1 Local Bus Service 6
5.4.2 Turning Radii 6
5.4.3 Bus Stop Placement Criteria, Park and Ride Lots, and Off-Street Bus Stations 6
5.4.4 Bus Shelter Pads 6
5.4.5 Bus Loading Zones 6
5.5 Maintenance of Traffic 7
5.6 Drainage 7
5.6.1 General 7
5.6.2 Submittals 8
5.6.3 Drainage Provisions 8
5.6.4 Hydrology and Hydraulics 9
5.6.5 Design Method 9
5.6.6 Storm Frequency 10
5.7 Right-of-Way 13
5.7.1 General 13
5.7.2 Types of Property Ownership and Rights 14
5.7.3 At-Grade Construction 15
5.7.4 Right-of-Way Information Requirements 18
5.8 Fencing 18

CHAPTER 5 CIVIL WORK

5.1 General

This section establishes the basic criteria to be used in the design of UTA Transit facilities. Civil design in public rights-of-way (ROW) shall conform to the design guidelines of the Utah Department of Transportation (UDOT) Standards or as determined by the local Agency Having Jurisdiction (AHJ).

Drainage shall meet the requirements and design guidelines of the local AHJ for the subject drainage.

5.2 Surveying and Mapping

5.2.1 Survey Control System

5.2.1.1 Horizontal Control

All horizontal controls shall be based on the State Plane Coordinate System, North American Datum 1983 (NAD83) in the appropriate zone and shall be reported in US Survey Feet. All existing monuments within the project area shall be tied to the horizontal control and shall be used to establish a basis of bearing and the coordinate system.

The precision of any secondary horizontal ground control surveys shall be, as a minimum, 1:50,000. All subsequent horizontal surveys shall, as a minimum, have a precision of 1:25,000.

5.2.1.2 Vertical Control

Vertical controls for this project shall be based on the North American Vertical Datum of 1988 (NAVD88), as defined by the National Geodetic Survey (NGS).

The precision of the vertical ground control and of supporting vertical ground surveys shall be at least Second Order, Class I. This is in accordance with the definitions set by the Federal Geodetic Control Committee and published in the document "Classifications, Standards of Accuracy and General Specification of Geodetic Control Stations," authored by the National Geodetic Survey in February 1974.

5.2.1.3 Surveys and Monumentation

Using field surveys, record information, and computations, the surveyor shall provide individual plats of survey. These final plats shall comply with the recording requirements of the state of Utah, as well as the pertinent counties and municipalities. The ROW envelope shall be described by metes and bounds. It is essential that the pertinent portions of all tracts, subdivisions, U.S. lands, parcels, and other areas affected by the envelope are similarly described and shown on the plats. Coordinates shall be provided for corners, as well as angle and curve points along the limits of the ROW.

All existing monuments shall be shown on the plans and restored to their original locations if disturbed during construction.

Permanent monuments shall be used wherever monumentation is required. These monuments shall be placed at each Point of Curve (PC) and Point of Tangent (PT) of right-of-way line curves, and as necessary to satisfy involved jurisdictions.

5.3 Roadway Elements

5.3.1 General

For general project consistency, the design standards for arterial, collector, and local roads shall conform with American Association of State Highway and Transportation Officials (AASHTO) Standards and the standards of the AHJ of that road, except as modified herein.

The criteria set forth in this section are applicable to the design of alterations of existing streets, construction of new streets, and UTA facilities. This includes modifications to driveways and parking lots of adjacent properties required for the construction of UTA facilities, which shall match the existing condition (in kind). Road reconstructions should match the existing surface type. The pavement section of roadway widening associated with BRT shall be designed to accommodate the design vehicle.

Road and parking surface materials shall be either cement concrete or bituminous concrete. However, bus pads, as well as bus acceleration and deceleration zones, shall be constructed using cement concrete.

5.3.2 Applicable Standards

The most current editions of these following documents are incorporated into these design criteria by reference and shall be adhered to wherever possible in the design of roads, parking, and related traffic control, except as specified in this manual. In cases of conflicting criteria sources, the standards adopted by the AHJ shall prevail, unless otherwise directed by UTA.

- UTA Standard Specifications and Drawings
- AASHTO - A Policy on Geometric Design of Highways and Streets
- AASHTO - Roadside Design Guide
- AASHTO - Guide for the Development of Bicycle Facilities
- AASHTO - Guide for the Planning, Design, and Operation of Pedestrian Facilities
- American Public Works Association (APWA) Standards
- Utah Manual on Uniform Traffic Control Devices (MUTCD)
- UDOT Manual of Right-of-Way Design

5.3.3 Grading

The design drawings shall clearly depict the limits of permissible construction disturbance, which shall include only those areas necessary for the construction of the proposed facilities. The requirements for clearing, grubbing, and removing unsuitable materials shall be defined. Areas disturbed by construction shall be protected by an erosion and sediment control system approved by the appropriate local AHJ. Erosion control methods to be considered include seeding and mulching, sodding, the application of geotextile fabrics for area stabilization, and the application of gravel or coarse rock.

In areas where fill slopes may encroach upon properties adjacent to UTA right-of-way, the use of retaining structures should be considered. The flattest practical and economically beneficial cut and fill slopes shall be utilized, up to a maximum of two horizontal to one vertical (2:1). Slopes steeper than 2:1 require a geotechnical analysis by a qualified geotechnical engineer and shall be approved by UTA. Cut/fill slopes shall be conducive to the establishment of permanent vegetation for erosion control and slope stabilization. The design of cut/fill slopes shall be confirmed during the geotechnical investigation.

5.3.4 Traffic Lane Widths

Traffic lane widths shall conform to the standards of the local jurisdiction. Bus lanes shall have a width of 12 feet.

5.3.5 On-street Parking

Consideration for on-street parking shall be determined in consultation with the AHJ. This will be based on traffic analysis, safety considerations, and demand for on-street parking.

5.3.6 Curbs, Wheelchair Ramps, and Curb Cuts

Pedestrian access ramps and curb cuts shall be provided in the following locations and circumstances:

- Existing ramps affected by construction shall be replaced or relocated. Any existing ramp or Americans with Disabilities Act (ADA) facility that is replaced shall meet current ADA requirements.
- At intersections where a sidewalk exists, and the curb returns are to be modified. It is not necessary to provide ramps and curb cuts where no sidewalk exists.
- At intersections and mid-block crosswalks where new curb and sidewalk are to be constructed.
- In the vicinity required of all designated accessible parking spaces.
- In all locations where pedestrian paths to the stations cross curbs on UTA property. This includes routes from parking lots, bus loading locations, and public streets.

Detectable warning surfaces shall be installed at all pedestrian access ramps. The design and location of curb cuts and ramps shall comply with the UDOT Standard Drawings, the U.S. Department of Transportation (USDOT) Standards for Accessible Transportation Facilities to comply with the ADA, and the local governing jurisdiction.

The provisions of this section do not apply to station platforms, which are described in Chapter 8 of this manual.

5.3.7 Sidewalks and Park Strips

Sidewalks, park strips, and planting areas, if required, shall comply with the standards of UDOT or the local state, municipal, or county agency having jurisdiction. Existing sidewalks impacted by the project shall be repaired or replaced in kind where practical. New sidewalks shall be provided upon the request of the AHJ and are subject to UTA approval.

For guidelines on sidewalks that cross train tracks, refer to Chapter 19 'Pedestrian Crossings'. On UTA property, sidewalks shall be located immediately adjacent to the curb where curbs are provided. Where no curbs are present, sidewalks shall be separated from roadway pavements by a minimum of 5 feet. Walkways that do not parallel streets shall be constructed to the same standards as sidewalks. No stairways shall be used in walkways unless an alternate route that meets the requirements of ADA is located in close proximity.

5.3.8 Driveways

Driveway characteristics, including pavement type and minimum width, shall meet state, county, or local standards as applicable. The design of driveways and/or access roads where buses operate shall meet the following criteria:

- Minimum Turning Radii – The design shall accommodate the minimum turning radii for UTA buses within the driveway or access road. Off-tracking into adjacent lanes, onto curbs and gutters, sidewalks, or landscaping is not permitted.
- Pavement Design – Pavement shall be concrete, designed to accommodate the expected volume of bus traffic operating on the driveway and/or access road.
- Driveway Grades – The maximum driveway grade shall not exceed 6%.

All existing driveways impacted by the project shall be replaced in kind. Driveway closures required to facilitate UTA operations or construction shall be approved by the local agency having jurisdiction.

5.3.9 Paving

5.3.9.1 Non-UTA Owned Facilities

New pavements shall be constructed using materials that conform to the latest standards of the AHJ and maintenance responsibility. Restored or widened pavements shall match the materials used in existing pavements prior to construction unless those materials are determined to be insufficient or obsolete. The pavement section of roadway widening shall be consistent with the adjacent pavement section. All pavements shall be designed to accommodate the expected traffic volumes and design vehicles.

5.3.9.2 UTA Owned Facilities

Roads and parking surfaces at UTA owned facilities shall be either cement concrete or bituminous concrete. However, bus pads, bus acceleration and deceleration zones, and bus facilities shall exclusively use cement concrete. The concrete paving sections in UTA facilities shall be based on the pavement design but shall have a minimum depth of 7 inches for concrete pavement. Bituminous paving sections shall also follow the pavement design but shall include no less than 3 inches of asphalt. The pavement structural section shall be designed to optimize the life-cycle cost of the roadway over a 20-year period.

5.3.9.3 Pavement Marking

Pavement marking on public streets shall be in accordance with the requirements of the AHJ. On roadways and parking areas within UTA property, pavement marking shall conform to the latest edition of Utah MUTCD. UTA parking stalls shall be delineated with 4-inch white stripes.

5.4 Bus Facilities

5.4.1 Local Bus Service

Local bus service issues, including but not limited to local bus stop and shelter placements, bus loading zones, and local bus service connections to the transit system, shall be coordinated with the local UTA business unit and UTA Service Planners. The design vehicle for these purposes shall be an AASHTO BUS-45 with a bicycle rack extension.

5.4.2 Turning Radii

Bus turning radii and arrangements shall be verified using turning template software (e.g., AutoTURN or equivalent). The design vehicle for these purposes shall be coordinated with UTA.

5.4.3 Bus Stop Placement Criteria, Park and Ride Lots, and Off-Street Bus Stations

Standards for bus-related road improvement designs, dimensions, and arrangements shall conform to the current UTA Bus Stop Master Plan and standard drawings for park and ride lots and off-street bus stations.

5.4.4 Bus Shelter Pads

Bus shelter pads and shelter typed shall be located, sized, and oriented in accordance with ADA regulations and coordinated with UTA Service Planners. Refer to the current UTA Bus Stop Master Plan for specific guidance.

5.4.5 Bus Loading Zones

The decision to use a street bus pull-out versus a bus loop shall be coordinated through the appropriate business unit and the Service Planners. The number of bus bays shall be determined based on the anticipated bus routes using the facility, in coordination with the appropriate business unit and Service Planners.

The preferred configurations for bus loading zones, in descending order, are sawtooth (most preferred), recessed, and then parallel, relative to the curb. The selection of locations for bus loading zones shall incorporate input from the appropriate business unit and Service Planners.

Each bus loading zone shall be equipped with one standard UTA bus shelter.

5.5 Maintenance of Traffic

The maintenance and protection of both vehicular and pedestrian traffic during construction shall be properly addressed during the design phase and clearly delineated on plan documents. The design shall comply with the Utah MUTCD and incorporate any additional requirements set forth by the AHJ. This includes the development of traffic staging and detour plans. All plans shall be approved by both UTA and the AHJ.

5.6 Drainage

5.6.1 General

The design of drainage systems, as outlined herein, aims to protect the transit system and adjacent facilities from storm runoff damage, accommodate runoff passing through or caused by UTA construction, protect UTA from liability related to runoff, and ensure environmentally responsible handling of storm drainage during construction.

Required relocation of existing drainage facilities shall be “replacement-in-kind” or “equal construction,” where the construction does not change the design flows. Local agencies having jurisdiction over drainage shall be consulted regarding potential betterments of existing facilities to be replaced.

The design of new UTA drainage facilities shall comply with the provisions of the UDOT Drainage Manual of Instruction, the AREMA *Manual for Railway Engineering*, and/or those established by local agencies having jurisdiction, as applicable.

UTA transit facilities may be situated parallel to existing railroad tracks, parallel to interstate highways, or integrated into existing surface roadways. In areas where existing drainage patterns are well established, changes in the overall runoff pattern should be minimized. Where retaining walls or other necessary structures alter existing surface drainage patterns, appropriate drainage systems shall be implemented to accommodate the expected flow.

Drainage facilities related to the construction of UTA transit systems shall be sized to match the capacity of adjacent existing drainage systems. Improvements to drainage components and systems owned by others shall be evaluated and agreed upon a case-by-case basis, with separate agreements between the involved parties.

5.6.2 Submittals

The design of drainage facilities that require review and approval by jurisdictional agencies shall be submitted in accordance with the established procedures of the respective agency. Agencies that may have jurisdiction include the U.S. Army Corps of Engineers, UDOT, Utah Department of Natural Resources, county flood control and/or soil conservation districts, and local municipalities.

All maintenance during construction, relocation, and restoration of drainage facilities shall conform to the most current edition of the design criteria for the agencies that may be affected by the drainage construction. These include:

- Utah Department of Transportation: UDOT Standard Drawings and Specifications and the UDOT Drainage Manual of Instruction
- Local County Criteria
- AHJ Criteria

5.6.3 Drainage Provisions

Drainage criteria outlined here apply specifically to the design of drainage facilities within the jurisdiction of UTA. The drainage of other facilities and connections to other drainage systems shall be designed in accordance with the criteria of the AHJ.

Storm runoff from a UTA station canopy structure shall be accommodated and designed to connect into a storm drain system or other approved location.

Where feasible, drainage shall be facilitated through gravity flow. In sections where gravity outfalls are not viable, the implementation of pumping stations may be necessary, subject to UTA's approval.

Sanitary sewer discharge is strictly prohibited from entering any drainage system under UTA's jurisdiction.

Ditches shall be provided as appropriate, configured where possible with a 2-foot flat bottom and a 2-foot drop from top of subgrade to bottom of ditch (larger if determined by hydraulic study). A geotechnical analysis shall be conducted to verify the suitability of the slopes to be used.

For BRT in a Type I or II running way, water is permitted to sheet flow across traffic lanes. In a side-running situation (Type II), gutter spread from the design storm event should not impede the bus lane. For a Type III or IV running way, storm water will be contained within the busway. Therefore, storm drain inlets may be required within the right-of-way. The design shall ensure that the spread from a 10-year storm is limited to the shoulder within the running way or 3 feet, whichever is greater.

5.6.4 Hydrology and Hydraulics

The following procedures shall be used in preparing hydrologic and hydraulic computations for drainage.

5.6.5 Design Method

a. Methodologies–Hydrologic and hydraulic design shall be conducted in accordance with the procedures and criteria as described in the current version of the following documents and guidelines:
    - UDOT Standard and Supplemental Drawings, UDOT Drainage Manual of Instruction.
    - AREMA Manual for Railway Engineering.
    - Utah Department of Natural Resources regulations.
    - U.S. Soil Conservation Service Technical Release No. 55 (TR-55), "Urban Hydrology for Small Watersheds".
    - Criteria established by local municipalities.
    - Other methodology used by pertinent agencies having jurisdiction.

b. Storm Water Facility Design–All storm water facilities shall be designed for the maximum expected discharge, resulting from the applicable design storm frequency as determined by the Rational Method. Where designing storm water facilities that drain areas requiring stormwater storage or detention, a hydrograph method shall be utilized for the applicable storm frequencies. The U.S. Soil Conservation Service TR-55 or Technical Release No. 20 (TR-20) are acceptable methods for this purpose. In jurisdictions with more stringent guidelines, local codes and guidelines shall take precedence.

c. Design of Cross Culverts and Storm Water Management Facilities–All cross culverts and stormwater management facilities shall be designed to handle the expected discharge from the applicable

design storm. This determination may be made using the "United States Soil Conservation Service (SCS) Hydrograph Method," utilizing either:

1. The TR-20 computer program, or
2. The TR-55 Tabular Hydrograph Method, using SCS Type 2 storm distribution.

d. Design Without Storm Water Storage/Detention Considerations–In cases where no stormwater storage or potential detention considerations exist, stormwater facilities may be designed using one of the following methodologies, as applicable:
   - The Recommended Hydrologic Methods as defined by the UDOT Drainage Manual of Instruction.
   - The methodology outlined in the U.S. Geological Survey (USGS) Special Report 38, for the applicable design storm.

e. Hydraulic Capacity Design–The hydraulic capacity of open channels, streams, swales, gutters, storm sewer pipe systems, and culverts shall be designed using the guidelines outlined in the UDOT Drainage Manual of Instruction.

f. Design of Water Impoundments–Where the impoundment of water behind a rail system is necessary, such impoundments shall be designed in accordance with the Utah Division of Water Rights – Dam Safety design requirements for small dams. The designs shall be submitted to the Utah Division of Water Rights – Dam Safety group for approval and permitting.

5.6.6 Storm Frequency

Wherever feasible, the top of rail elevation shall be a minimum of 1 foot above the 100-year flood elevation. Facility design shall accommodate the following storm frequencies, except where the AHJ has differing standards. In such cases, the more stringent standards shall apply.

Facilities shall be designed/protected by accommodating the storm frequency listed:

Culverts and drainage facilities crossing a UTA CRT system (where flooding could damage or disrupt the system)	100-year
Culverts and drainage facilities crossing a UTA BRT or LRT system (where flooding could damage or disrupt the system)	50-year
All culverts and drainage facilities crossing secondary roads	50-year
Track roadbed (to top of subgrade), longitudinal drains or subdrains (that could flood roadbed)	50-year

Parking lots, longitudinal roadway storm drains	10-year

5.6.6.1 Selection of Drainage Structures

Wherever possible, drainage structures that are to be maintained by UTA shall conform to the UDOT and/or UTA standards. In cases where standard drainage structures are deemed unsuitable, the structures shall be designed to meet the minimum requirements.

Drainage structures located on a state, county, or local facility shall comply with the standards of the respective AHJ.

5.6.6.2 Pipe Size and Materials

- Within a Trackway–Class V, Wall C reinforced concrete pipe shall be used. The use of perforated PVC or HDPE materials is subject to UTA approval on a case-by-case basis and will generally be limited to locations not near railroad trackage.
- Outside of a Trackway–All pipe materials shall conform to the requirements of the local jurisdictional agency. Material selection shall be based on life-cycle analysis, loading, and soil type.

Cathodic protection of pipes within the trackway or potential future trackway may be required. For detailed criteria, refer to Chapter 16 of this manual.

- Storm drains–minimum diameter shall be 18 inches.
- Underdrains–minimum diameter shall be 8 inches.
- Crossing culverts–minimum diameter shall be 24 inches.
- Velocity–Pipes shall be designed for a minimum velocity of 3.0 feet per second.

5.6.6.3 Location of Drains

Inlets shall be provided at required drainage catch points. In paved areas, particularly at the sag point of a sag vertical curve, flanking inlets shall be placed on either side of the central inlet. Special conditions, such as station loading areas, sidewalks, pedestrian crossings, driveways, and bicycle facilities, should be considered for inlet placement.

Manholes or other means of access shall be provided at point where there are changes in pipe slope, alignment, size, and at locations where multiple pipes intersect.

Underdrain cleanouts along all drainage lines shall be provided at maximum intervals of 200 feet, with cleanouts placed at 200-foot centers. Cleanouts are required at each 90-degree bend and for every two 45-degree bends. Placement of cleanout boxes and storm drain structures shall not be located between tracks, wherever feasible.

Manholes or cleanout boxes within the roadway section shall be located and spaced according to the AHJ requirements.

Manholes or catch basin within UTA trackway and facilities shall be spaced in accordance with the following criteria:

Size of Pipe (inches)	Maximum Distance (feet)
18–24	300
27–36	400
42–54	500
≥ 60	1,000

5.6.6.4 Parking Lots

Parking lots shall be designed to ensure that stormwater is effectively removed. The design shall facilitate stormwater removal through overland flow to a swale gutter or curb and gutter, and then to an inlet. From this inlet, the water shall enter either a closed drainage system or an open ditch. The maximum velocity of flow out of the parking lot shall be in accordance with local criteria. Overland flow should maintain a gradient of at least 1% wherever possible.

5.6.6.5 Storm Water Management and Sediment Control

MS4 requirements shall be met for the jurisdictional municipality within which the project's stormwater ultimately outfalls. Sediment control shall comply with the standards and specifications of the Utah Department of Environmental Quality Division of Water Quality. Appropriate Utah Pollutant Discharge Elimination System (UPDES) permits shall be obtained, a Storm Water Pollution Prevention Plan (SWPPP) developed, and erosion and sediment control procedures established, based on the approval of the Division of Water Quality. Additionally, local sediment and erosion control requirements established by the municipality or entity having jurisdiction shall also be met. Sediment control measures may be accomplished through various methods, as required and appropriate.

The use of Best Management Practices (BMPs) should be employed where possible. Some BMPs to be considered where designing storm water management include:

- Bioretention facilities such as grass buffer strips or vegetated filter strips

- Catch basin/storm drain inserts (may be required by local jurisdiction)
- Constructed wetlands
- Dry wells
- Infiltration basins and trenches
- Media filtration
- Porous pavements
- Bioswales
- Wet and dry detention ponds

5.6.6.6 Detention Requirements

The use of detention facilities may be required in areas where the proposed runoff volume exceeds the existing runoff volume at a specific outfall location. Local jurisdictional criteria shall govern storm water detention requirements. The detention facility will be designed to release water at either the existing runoff rate or the regulatory rate, whichever is more stringent.

For UTA-owned facilities that are not subject to local jurisdictional requirements, detention facilities shall be designed for the 10-year, 24-hour event. Along the railroad corridor, detention facilities will be designed for the 50-year, 24-hour event.

Detention facilities shall maintain a minimum freeboard of 1 foot above the design event. Additionally, an emergency spillway or riser shall be included to protect the integrity of the detention facility against storms larger than the design event.

5.7 Right-of-Way

5.7.1 General

All right-of-way design shall be in accordance with the UDOT Manual of Instruction for Right-of-Way Design. Right-of-way encompasses all interests and uses of real property necessary to construct, maintain, protect, and operate the transit system. Some right-of-way requirements are temporary and reversionary, while others are permanent, as dictated by operating needs. The objective is to acquire and maintain the minimum right-of-way required, consistent with the system's requirements and best right-of-way practices.

Proposed taking envelopes should take in to account topography, drainage, ditches, retaining walls, service roads, utilities, construction staging needs, and the characteristics of existing and proposed structures and earthworks.

Since right-of-way plans approved by UTA serve as a basis for property acquisition, all required interests and uses shall be depicted on the right-of-way plans along with the detailed property dispositions.

The limits of permanent right-of-way shall be shown on the right-of-way plans utilizing simple curves and tangents described by bearings and distances. Spiral curves shall not be used in right-of-way descriptions. The use of chords in lieu of curves is permissible under special conditions approved by UTA.

Right-of-way requirements for aerial or underground transit facilities, should a future need arise for them, are described herein.

5.7.2 Types of Property Ownership and Rights

5.7.2.1 Fee Simple Title

- Fee simple title is absolute ownership of property, unencumbered by any other interest.
- Fee simple title should always be the primary type of right-of-way ownership consideration for any surface or aerial construction. If this is not practical, alternative types of right-of-way ownership should be used.

5.7.2.2 Easements

5.7.2.2.1 Permanent Surface Easement with an Upper Limit

A permanent surface easement is a non-possessory partial interest in land, conveyed from the grantor (servient estate) to the grantee (dominant estate) for specific use or uses. It grants a permanent but partial use of the land for a specific purpose into perpetuity.

- This easement type provides the necessary area for transit structures and for future maintenance of structures supporting aerial facilities located on private property. Defined lateral limits of this easement shall be described on the drawings. Where required, upper and/or lower limits shall also be described.
- The recommended easement width shall include basic guideway width, drainage, supporting slopes, utilities, and shall consider the overall impact on the affected property.

5.7.2.2.2 Permanent Underground Easements

A permanent underground easement covers the entire transit facility located beneath the ground surface. It shall have defined upper and lateral limits, which shall be shown on the drawings. Lower limits need only be described in cases where special limiting features exist.

5.7.2.2.3 Permanent Aerial Easements

An easement that completely envelopes the aerial portion of the transit facility. The lower and side limits of this easement shall be shown on the drawings. Where required, upper limits shall also be described.

5.7.2.2.4 Temporary Construction Easements

A temporary easement with a specifically defined duration, providing space for contractor use during construction. This easement reverts back to the property owner (grantor) upon completion of construction or on a specified date.

5.7.2.2.5 Public Utility Easements

Required utility easements shall be treated as right-of-way. Bearings and distances along the sides of these easements shall be shown, as well as the length, widths, and ties to the limits of the right-of-way. All utility easements shall comply with local and utility regulations.

5.7.2.3 Right-of-Way Limits

The following criteria serve as general guidelines for establishing the limits of the right-of-way. The specified dimensions represent minimum conditions and shall be modified where engineering or real estate requirements dictate additional needs. All right-of-way limits shall be defined as either vertical or horizontal planes.

In cases where the right-of-way of existing freight railroads is deemed generally sufficient for transit facilities and operations, the application of these guidelines shall be subject to UTA's discretion. only as determined necessary under the consideration of UTA. Adjustments shall be made as necessary, considering the specific needs and considerations of UTA.

5.7.3 At-Grade Construction

5.7.3.1 Upper Limit – BRT, LRT, CRT

Normally, an upper limit is not required for at-grade construction. However, where an upper limit is necessary, it shall be defined by the elevations of horizontal planes. These planes may be stepped as required, with the steps co-locating with existing property lines or suitable topographical features.

- BRT: The minimum vertical distance from the top of the running way to the horizontal plane above shall be 16 feet 6 inches. If the running way is designed to accommodate future light rail, the minimum desirable

vertical distance from the top of future catenary support structure to the horizontal plane above shall be 5 feet.

- LRT: The minimum vertical distance from top of the catenary support structure to the horizontal plane above shall be 5 feet, and the horizontal clearance shall be 10 feet from the catenary.
- CRT: The minimum vertical distance from the top of rail to the horizontal plane shall be 18 feet.

5.7.3.2 Lateral Limit – BRT, LRT, CRT

The right-of-way required for BRT, LRT, and CRT systems shall depend on several factors, including the track use, the nature of the running way, necessary clearances, and the need for slope banks, retaining walls, or other structures. In some instances, additional right-of-way may be needed to accommodate the entire trackway or running way, along with associated slope banks and structures. This need is particularly relevant where considering the ownership and maintenance responsibilities of these facilities.

- All tie-back, pile, or anchor-tie systems should be contained within the acquired right-of-way.
- Additional rights-of-way may be necessary for:
    - Access and maintenance roads.
    - Additional tracks.
    - Drainage facilities, including ditches.

In retained cuts or on retained fills, the minimum right-of-way required shall be measured laterally to 2 feet outside the outer face of the retaining wall. For side cuts, unretained open cuts, or fills, the slopes shall include side or surface ditches plus rounding. The desirable right-of-way limit should be 5 feet outside the toe of fill slopes or top of cut slopes. This measurement is subject to variation in cases where the existing right-of-way is restrictive, and the costs for acquiring additional right-of-way would be excessive.

- BRT: For a Type III running way with an approximately level cross-section, the minimum right-of-way width shall be 24 feet, excluding the barrier curb.
- LRT:
    - In open areas, the minimum right-of-way width for an approximately level cross-section, including the track bed and the catenary system support poles, is 35 feet.
    - In streets where tracks are mixed with automotive traffic, the minimum right-of way width is 28 feet, inclusive of the catenary system.
    - On exclusive right-of-way, the minimum allowable distance from the centerline of the nearest track to the limit of the right-of-way is 10 feet 6 inches.

  - On restrictive rights-of-way, the preferred minimum right-of-way for two tracks is 35 feet.
- CRT: The absolute minimum distance from the centerline of the nearest track to the limit of the right-of-way is 10 feet.

5.7.3.3 Lower Limit

Where a lower limit is required, it shall be defined similarly to the upper limit. The definition shall use a minimum vertical distance of 10 feet below top of pavement, with an exception for retained fill sections. In retained fill sections, the lower limit shall encompass the structural support system required for those sections.

5.7.3.4 Aerial Construction

- Upper Limit: Where required due to local conditions, The upper limit is delineated by the elevations of horizontal planes. These planes may be stepped as necessary, with the steps co-located with existing property lines or prominent, suitable topographical features. The minimum required vertical distance from top of the catenary support structure to the horizontal plane above shall be 5 feet.
- Lateral Limit: A minimum lateral limit of 5 feet outside the centerline of each track is required. Additional easements shall be required for maintenance of and repair of structures.
- Lower Limit: The lower limit, where required by local conditions or specifically directed by UTA, shall be at ground level with specified use restrictions, except where crossing other ROW. For aerial support structures, the lower limit shall include support foundation.

5.7.3.5 Storm Drainage and Utilities

- Open Ditches: The minimum total width for permanent surface drainage easements shall be governed by local agency requirements. However, it shall be no less than 6 feet for paved ditches and channels, and 8 feet for unpaved ditches.
- Underground Drainage: Easement widths for underground drainage systems shall be approved by the local agency. As a general guideline, the minimum easement width should be 10 feet, with a minimum clearance of 2 feet from outside edge of the structure to the easement line. Provision of temporary construction easements shall also be considered.
- Utility Easements: The width of public utility easement shall be governed by the relevant agency requirements but shall not be less than 7 feet.

5.7.3.6 Stations and Park-and-Ride Lots

Right-of-way for stations shall encompass the necessary space necessary for platforms, fare collection, waiting areas, stations' ancillary facilities, and the structure itself. In addition to considering the structural, mechanical, and electrical space requirements, the needs for pedestrian and vehicular circulation shall also be considered.

5.7.4 Right-of-Way Information Requirements

- Although UTA may not require acquisition of public space, all plans shall show the right-of-way envelope as continuous, crossing public and private spaces. Private space involved shall be clearly identified.
- The boundary for all areas supporting new construction, such as power substations, shall be geometrically defined, with ties shown wherever the location is not contiguous to the right-of-way.
- Separate drawings illustrating areas of public property to be closed (including street closings) and areas utilized for the transit system shall be provided. These drawings shall be prepared in accordance with local requirements.

5.8 Fencing

For semi-exclusive track in a dedicated right-of-way or joint use LRV/freight track in dedicated right-of-way, access to the track corridor shall be controlled by fencing. The fencing shall be parallel to the track, forming an open-ended envelope and allowing unrestricted transit vehicular movement.

Vehicle service, maintenance, and storage areas shall be secured by perimeter fencing consisting of 6-foot-high galvanized chain link.

The size, type, and length of fencing or barrier shall be determined by site-specific requirements, or AHJ requirements and shall follow UDOT standard construction details and specifications, or equivalent. Fencing, and other metal objects, that are within 15 feet of the track, shall be grounded in accordance with the NEC.

Fencing shall extend along the entire right-of-way to enhance security and safety. Fencing shall be provided as follows:

- Stations–Fencing shall be installed to prevent pedestrians from crossing UTA or freight trackage except at designated pedestrian crossings. Fencing shall be provided between UTA and other railroad trackage, parallel to the track, and typically extending 100 feet beyond the end of the platform. Fence shall be 4-

foot-high chain link, black vinyl coated, and grounded to address potential stray current exposure from nearby track.

- Along right-of-way with existing fencing–Replace fencing in-kind, where possible, where existing fencing is disturbed or in disrepair. Grounding shall be verified or reestablished as needed.
- Vehicle service, maintenance, and storage areas–Use 6-foot-high galvanized chain link fencing in accordance with UDOT standard construction details and specifications. Fencing shall be grounded per NEC requirements.
- Along new or existing pedestrian accessible bridges over trackage–Use fencing to prevent or minimize objects from being thrown or dropped onto the right-of-way. The fencing shall be appropriate for the bridge structure, with top of fence a minimum of 10 feet above adjacent surface, in accordance with UDOT standard construction details and specifications, and shall be grounded where metal elements are within 15 feet of the track..

END OF CHAPTER 5.

DESIGN CRITERIA MANUAL

/ CHAPTER 6

UTILITIES

Table of Contents

CHAPTER 6 UTILITIES **1**

6.1 General 1
6.2 Existing Information 1
6.2.1 Ownership by Others 2
6.3 Utility Agreements 3
6.3.1 Master Utility Agreements 3
6.3.2 Supplemental Utility Agreements 3
6.3.3 Betterment Utility Agreements 3
6.4 Scope of Relocation 4
6.4.1 Drawings 4
6.5 Utah Transit Authority Restricted Utility Area 5
6.6 Conflicting Utilities 5
6.6.1 Crossing Utilities (Underground) 6
6.6.2 Crossing and Parallel Utilities (Overhead) 7
6.6.3 Parallel Utilities (Underground) 8
6.6.4 Abandoned Utilities 8
6.7 Corrosion protection 9
6.8 Natural Gas Lines 9
6.8.1 Standards 9
6.8.2 Requirements within Railroad ROW 10
6.9 Sanitary Sewers 10
6.9.1 Standards 10
6.9.2 General Requirements 10
6.9.3 Manhole Locations 11
6.10 Underground Communications Systems 11
6.11 Water Mains 12
6.11.1 Standards 12
6.11.2 Requirements 12
6.12 Liquid-Petroleum Pipelines 13
6.12.1 Standards 13
6.13 Streetlights and Traffic Signals 13
6.13.1 Standards 13
6.14 Overhead Utility Lines 14
6.14.1 Standards 14

CHAPTER 6 UTILITIES

6.1 General

This chapter sets out the criteria for the relocation, replacement, adjustment, and/or abandonment of existing utility facilities within all transit systems, including Bus Rapid Transit, Light Rail Transit, Streetcar, and Commuter Rail Transit. During initial design reviews, potential utility conflicts shall be identified with input from municipalities and utility owners. Those utilities determined to be conflict-free will remain in their existing configuration. Consideration will be given to the needs of UTA, the obligations and requirements of utility owners, and the utility service needs of affected properties.

For transit systems where the running way or track is shared with automotive traffic, any relocation, replacement, adjustment, and/or abandonment of existing utilities shall comply with the standards and criteria set by the agency with jurisdictional authority over the roadway and the utility owner's standard criteria. New or relocated private and public utilities within transit system corridors that are in dedicated lanes, corridors, or are physically separated from automotive traffic, running ways shall comply with the criteria set forth in this chapter.

If a BRT running way is intended to accommodate a future light rail transit system, consultation with UTA is required to apply the Design Criteria in order to identify any potential utility conflicts, as well as to determine other clearance and casing requirements.

All future utility crossings requests shall be approved in writing by UTA. The negotiations for crossing licenses will be handled through UTA's Real Estate Division.

6.2 Existing Information

The designer shall identify and contact all utility owners whose facilities may be impacted by the project. Copies of all available information concerning affected utilities shall be obtained. The information to be acquired includes the owner, type, size, material, location, and existing easements of existing and proposed utility facilities. Where information is incomplete or not sufficiently definitive, arrangements shall be made for surveys, Subsurface Utility Engineering (SUE), and non-intrusive vacuum test holes as necessary.

To the greatest extent possible and economical, existing utilities shall be left undisturbed. However, where the construction of the UTA system makes that objective impractical or economically unviable, provisions for relocation or reconstruction shall be included as part of the design. The designer shall coordinate with the

appropriate utility owners and appropriate regulatory agencies at all design stages and shall reach agreement with respective owners before completion of detailing drawings. In cases where utility owners prepare designs, the designer shall ensure the work is compatible with UTA system needs and shall reference the work on UTA plans.

6.2.1 Ownership by Others

Any utility work for facilities not owned by UTA shall conform to the utility owner's standards. The designer is responsible for submitting drawings and specifications to the respective utility owners and government agencies for review at various stages of completion. Documentation of acceptance and approval from utility owners is required. Upon completing the design, the designer shall submit a list of improvements and shall secure a firm estimate of the work cost to be undertaken by the utility to accommodate the proposed construction from each affected utility owner. The design information showing the alignment and depth of the existing and relocated utilities owned by others shall be coordinated with the utility owner and the UTA transit project designer to be incorporated into the transit project design, confirming that no conflicts exist between utilities and the proposed transit project.

Utility lines crossing beneath railroad trackage shall conform to Chapter 1, Part 5 "Pipelines" of the AREMA *Manual for Railway Engineering*. Casement pipes shall be provided for pipelines carrying oil, gas, petroleum products, or other flammable or volatile substances, or steam, water, or other nonflammable substances under pressure. Electric duct, telecommunications conduit, and drain crossings may not require encasement where the facility's strength can withstand railroad loading. Where the rail system is built over existing utilities to be retained in service, the facilities shall be uncovered and encased prior to placing track or, if more economical, replaced with a new system with a casement pipe.

UTA may grant a variance to casing requirements for an existing utility upon request if any of the following circumstances exist:

1. There is an existing adjacent rail line, and there is no casing under the existing adjacent rail line, and the utility can structurally support the rail loadings without the casing.
2. There is an existing adjacent rail line, and an existing pressurized, cast iron, lead-jointed pipe crosses the existing adjacent rail line, and the pipe can structurally support the rail loadings without a casing.
3. An opportunity exists to use a concrete slab to provide structural support and protection.

6.3 Utility Agreements

Utility agreements are a vital part of the utility coordination, design, and construction process. All projects impacting utilities that require relocation or adjustment shall enter into a Master Utility Agreement and a Supplemental Utility Agreement for each affected utility company. Projects located on facilities under the jurisdiction of the Utah Department of Transportation (UDOT) and/or jointly managed with the UDOT shall follow UDOT's *Utility Coordination Manual of Instruction* (latest edition).

6.3.1 Master Utility Agreements

The utility engineer is responsible for coordinating and entering into Master Utility Agreements with each potentially affected utility company at the beginning of the project, establishing the terms and conditions applicable to the utility work to be performed. The Master Utility Agreement shall clearly assign responsibilities for locating, design, right-of-way, construction, and costs.

6.3.2 Supplemental Utility Agreements

Following the identification of utility conflicts where a utility relocation or adjustment is required, the utility engineer shall coordinate the completion of supplemental utility agreements to describe the nature and basics of the utility work to be completed. These agreements shall include:

1. Scope of the utility work
2. Responsibility for design and construction
3. Schedule
4. Right-of-way
5. Cost for relocation/adjustment
6. Responsibility for cost
7. Other information as necessary (specifications, standard details, etc.)

6.3.3 Betterment Utility Agreements

Betterment agreements shall be coordinated as early as practicable in the design phase to avoid delays during later project phases. Betterment agreements between UTA and the utility owner are intended for utility upgrades or other improvements negotiated during the design phase.

6.4 Scope of Relocation

Utility relocation is to be performed only to the extent required by the construction of transit systems and facilities. No additional improvements, betterments, and other changes to utility systems shall be incorporated into UTA-sponsored work except as expressly agreed and approved in writing by UTA.

6.4.1 Drawings

6.4.1.1 Requirements

Composite utility plans shall be prepared, showing all existing and proposed utilities in the vicinity of all proposed construction. These plans shall indicate information such as track centerlines, buildings, sidewalks, paved areas, poles, pipelines, tunnels, and other surface and subsurface features. Utility plans shall include the owner, unique ID, utility type, size, material, test hole info, and SUE level.

It shall be noted on the drawings that the contractor shall maintain service connections. Service lines between utilities and adjacent properties shall be investigated for service maintenance consideration but do not need to be indicated on the drawings unless required by the utility owner to which the service is connected.

6.4.1.2 Procedures

As the design is developed, preliminary plans shall be furnished to the affected utility companies. These companies shall be requested to verify their existing facility types, sizes, and locations, and to supply marked-up plans or prints of owners' plan sets reflecting the necessary information. The designer shall then prepare drawings that reflect all assembled information and the latest planned developments. These drawings shall indicate sufficient detail to consider conflicts, develop drawings for proposed utility relocations, and to prepare alternative relocation schemes to accommodate the project.

Additional utility research and/or locating shall be conducted as potential utility conflicts are identified through the design process. Critical utility elevations and locations shall be determined and checked by subsurface investigation at a SUE Quality level A. This is the highest level of accuracy, utilizing non-destructive digging equipment at critical points for precise horizontal and vertical position, type, size, condition, and material.

Coordination between the designer and the utility agencies shall be an ongoing activity during the design phase.

Proposed designs that affect utilities shall be jointly considered by representatives of UTA, the designer, and the utility company in order to reach agreement on the implementation of the improvements or modifications. Prints of the final utility design documents shall be forwarded to each utility agency for final approval.

Any additional right-of-way (ROW) acquisitions that may be required shall be identified as early in the design process as possible, and acquisition details identified as soon as utility concurrence is secured.

The utility engineer shall maintain a Utility Conflict Matrix to catalog all utilities within the project limits and track the status and progress towards resolution for each utility conflict.

6.5 Utah Transit Authority Restricted Utility Area

The UTA Restricted Utility Area (RUA), inclusive of the LRT RUA, is a designated zone beneath and around the track roadbed, guideway, or running way, where utilities should not be located. The RUA definition differs based on transit construction type and corridor ownership. If a BRT running way is planned to accommodate a future LRT system, consultation with UTA is required to determine the RUA applicability. Any utilities to be located in the RUA shall receive prior authorization from UTA. The RUA is defined as follows:

1. In CRT and LRT corridors, where UTA owns the right-of-way (i.e., 1300 South to Draper, and FrontRunner), the RUA extends to the entire width of the right-of-way and reaches a depth of 10 feet.
2. In corridors where UTA operates in a street-running and/or mixed-flow scenarios, and where operation permission is granted through an agreement with the roadway-owning authority (i.e., downtown Salt Lake City, the University line), the RUA spans the width of the guideway. This is defined from curb-to-curb or from striping-to-striping that separates the trackway from the roadway and extends to a depth of 10 feet. In situations where the LRV guideway shares space with a left turn lane, the boundary of the RUA is defined by the striping that delineates the shared lane.

6.6 Conflicting Utilities

Relocation, replacement, adjustment, protection, and/or abandonment of existing utility facilities shall be required only where an actual conflict arises between the existing utility and the transit system. The Designer shall identify such conflicts and notify UTA, considering the following factors:

1. Whether the design, construction, maintenance, and/or operation of the proposed transit interferes with an existing utility's capacity, in its existing location, to provide its intended service; and whether the utility was properly installed following the criteria set by the utility owner and relevant authorities.
2. Whether the design, construction, maintenance, and/or operation of the transit system obstructs reasonable access to valves, vaults, air vacuums, pressure reducing stations, manholes, man-ways, and hand holes, preventing the utility owner from operating and/or maintaining its utility in accordance with previously established operation and maintenance criteria.
3. Whether a utility in its existing location poses a potential safety hazard to the general public upon completion of construction.
4. Whether the grade changes for running ways or structures compromise the required minimum cover, defined by the utility owner's reasonable criteria, solely for the benefit of UTA.
5. Whether soil stresses exerted on an existing utility by transit system improvements jeopardize the integrity of the utility facility, considering the facility's depth, location, and soil type.
6. Whether the utility in its existing location disrupts the installation or maintenance of the transit system.
7. Whether the utility is situated in the RUA.

6.6.1 Crossing Utilities (Underground)

Existing utilities that UTA determines to conflict with the transit system shall be relocated and/or protected by UTA in accordance with the following criteria.

Existing utilities crossing a BRT transit system shall be relocated per the requirments of the local jurisdiction owning the roadway.

Existing utilities crossing the RUA, determined by UTA to conflict with the LRT system, shall be relocated and/or protected by UTA in accordance with the following criteria.

6.6.1.1 Casings

Pressurized liquid lines conflicting and crossing the RUA, including but not limited to transmission and distribution water mains, water service laterals exceeding 2 inches in diameter, fire protection service lines, and pressurized sanitary sewer main lines, shall be installed within a solid steel casing. If split steel casings are installed, all joints, seams, gaps, and interfaces between casing sections shall be fully welded or bolted to ensure casing pipe containment. This ensures that failures of the carrier pipe are evident at either end of the casing pipe, outside the RUA. The replacement utility shall be situated vertically beneath the RUA; a shallower depth requires UTA's prior

approval. The casing ends shall extend 2 feet beyond the RUA. Casings are not required for any gravity systems, including storm drain and sanitary sewer mains or laterals, or any other lines containing non-pressurized liquids.

6.6.1.2 Depth of Burial

All new and relocated crossing underground utilities in roadways shall be buried to a depth compliant with the requirements of the local jurisdiction, outside of the RUA, or provide the minimum cover as required by the utility owner unless agreed upon by all parties, including UTA, the local jurisdiction, and the utility owner.

6.6.1.3 Water Services to Residents and Businesses

Where roadway widening or distribution water main relocations disrupts water service to residents and/or businesses, existing water meters shall be relocated in accordance with criteria established by the utility owner. Splices in water service laterals up to 2 inches in diameter are subject to approval from the local jurisdictional and the utility owner.

6.6.1.4 Communications, Natural Gas, and Electrical Lines

Existing utilities shall be lowered in place or looped as required, with sections of HDPE split casings installed to ensure the existing conduit is continuous and installed to facilitate future removal as necessary.

Use casings for pipes carrying hazardous materials that are flammable, corrosive, expansive, energized, or unstable. The casing wall thickness shall be reviewed and approved by UTA.

6.6.2 Crossing and Parallel Utilities (Overhead)

Clearances from the overhead distribution system shall conform with the requirements of Chapter 13 of this Design Criteria Manual, the National Electric Code, utility owners' requirements, the American Railway Engineering & Maintenance-of-Way Association (AREMA), the Public Service Commission, and any other governing authority.

Any modifications to existing overhead utility lines, poles, and appurtenances, including service lines to adjoining properties, in a railroad corridor shall be performed by the facility owner. This shall be done in accordance with the appropriate jurisdiction's laws and regulations, utility owners' standards, the National Electrical Safety Code, and appropriate railroad overhead wire standards, including those of AREMA.

Transmission and distribution electrical or communications lines attached to poles based on previous license agreements shall be relocated, adjusted in place, or looped underground as determined to be in the best interest of UTA.

If a BRT running way is intended to accommodate a future light rail transit system, consult with UTA to determine the application of the Design Criteria to determine if it is necessary to provide clearances from a future overhead distribution system as outlined above.

6.6.3 Parallel Utilities (Underground)

All new and relocated parallel underground utilities in a transit running way shall be buried to a depth that is compliant with the requirements of the local jurisdiction and provide the minimum amount of cover as required by the utility owner unless agreed to by all parties including UTA, the local jurisdiction, and the utility owner.

Utilities located within an RUA that contain a pressurized liquid and determined to be in conflict, shall either be replaced with a replacement utility located outside the RUA as required, to connect back to its existing line, or installed within a steel casing, steel split casings, or other casing material as determined to be in the best interest of UTA. If reasonable access to hand-holes, manholes, vaults, or access man-ways is not compromised, the utility may remain in its existing location, with prior approval by UTA.

Gravity systems shall be designed in accordance with utility owners' established criteria and installed between manholes at a depth such that the original function and capacity is maintained and lateral connections from residences and businesses, or curb inlet boxes shall meet minimum grade requirements.

Parallel sewer trunk-lines shall not be located in the running way unless approved by UTA

Utilities located outside a BRT running way or LRT RUA and determined by UTA to be in conflict with roadway widening, including hand-holes; gas and electrical vaults; and communications vaults, lines, and cables previously located within park strips, mow strips, or behind sidewalks, and as a direct result of transit system construction are now located in roadways or sidewalks, shall be modified according to the utility owner requirements.

6.6.4 Abandoned Utilities

6.6.4.1 Abandoned Transmission, Distribution Water, Sanitary Sewer, and Storm Drain Lines

1. Any piping abandoned as a result of resolving conflicting utility shall be abandoned in place. Abandoned pipe larger than 6 inches in diameter shall be flow filled within the zone of influence.

2. Manholes abandoned due to the resolution of a previously conflicting utility shall be abandoned in place. The ring and cover shall be returned to the municipality having jurisdiction. The top manhole section shall be removed to a depth of at least 3 feet below the top of the sub-grade. The interior influent and effluent piping shall be flow filled and the remaining sections backfilled and compacted in accordance with the municipalities established criteria.
3. Document the location of abandoned utilities on the as-built drawings.

6.6.4.2 Abandoned Communication, Gas, and Electrical Lines

All abandoned communications lines and gas and electrical lines shall be abandoned in place and conductors removed within construction zone.

6.7 Corrosion protection

Corrosion protection shall be coordinated between UTA and the utility owner. If the utility owner deems that corrosion protection is required and UTA is performing any related work to the utility, the utility owner alone has the responsibility to specify its requirements for corrosion protection to UTA. Special care shall be taken for buried pressurized utilities with metal pipelines that are crossing or closely paralleling an electrified transit system. Designers shall refer to Chapter 16 for corrosion protection and stray current mitigation requirements.

6.8 Natural Gas Lines

6.8.1 Standards

Design, installation, and testing of permanently relocated gas lines shall comply with the utility owner's current standards and the following:

- "Minimum Federal Safety Standards for Gas Lines," Title 49 Code of Federal Regulations, Part 192
- "ASME Guide for Gas Transmission and Distribution Piping Systems" (American Society of Mechanical Engineers' Gas Piping Standards Committee)

The utility company owner or a UTA contractor (with proper approval and contractor certification by the utility owner) may perform construction of temporary and/or permanent gas mains and replacement of mains, as agreed by the utility owner and UTA. Installation and location of Cathodic Protection Monitoring stations shall be coordinated with the utility owner. The lines to be maintained in place shall be the responsibility of the

construction contractor, and the work shall be performed in accordance with the contract documents and the utility company owner's standards and procedures.

6.8.2 Requirements within Railroad ROW

Steel pipelines installed within any railroad ROW, designed to operate at a pressure producing a hoop stress in the pipe equal to or greater than 30% of specific minimum yield stress (SMYS), shall be subjected to a hydrostatic test. This test shall apply a pressure of at least 1.5 times the maximum allowable operating pressure and last for a minimum of 8 hours.

Inspection of welding on pipelines installed within any railroad ROW shall conform to Federal Pipeline Safety Standards (*Title 49 of the Code of Federal Regulations, Part 192, Articles 192.241 and 192.243*), as well as the current standards of the owning utility. Steel pipelines with a diameter of 6 inches or greater, operating at a pressure producing a hoop stress of 20% of the SMYS or more, shall undergo non-destructively testing of all girth welds across their entire circumference.

Testing of pipeline mains and services installed within the ROW shall conform to *Title 49, Part 192, Subpart-J-Test Requirements*, in accordance with the owner utility's current standards.

6.9 Sanitary Sewers

6.9.1 Standards

All relocation, replacement, or extension of existing sanitary sewer systems shall meet the following criteria:

- Comply with applicable federal, state, and local standards.
- Design according to the criteria established by the governing municipality and the Utah Department of Environment and Natural Resources (Utah DENR).
- Approved by the governing municipality/agency.

6.9.2 General Requirements

Where replacement or relocation of existing sewers and appurtenances is necessary, capacity and function equivalent to that of existing facilities shall be provided. However, no sanitary sewer trunk line shall be replaced with a pipe of less than 8-inch diameter. Pipe material, size, and appurtenances shall be in accordance with the current standards of the governing utility agency.

Sanitary Sewer trunk lines running parallel to the trackage in the ROW are only allowed with prior approval from UTA.

Sanitary sewer service to adjoining properties shall be maintained at all times by supporting in place, providing alternate temporary facilities, or by diverting to other points. Closed flumes of sufficient size shall be provided to carry sewage flow temporarily where pipes must be removed from service. No sewage shall be discharged into excavations, public streets, or public and private ROW.

6.9.3 Manhole Locations

Utility lines involving manholes shall be designed in accordance with the owning local jurisdiction.

For utility lines near railroads, manholes shall have clearance of 11 feet to the edge of the nearest tie. Where trackage and roadbed are constructed near existing utilities to be retained in service, manholes that do not maintain 11 feet of clearance shall be abandoned or relocated. A variance may be granted by UTA, upon request, to allow an existing manhole to remain as close as 5 feet to the edge of tie.

6.10 Underground Communications Systems

Communications system designs shall be coordinated with the utility owner.

Communications systems include all systems for the transmission of information and can be electrical or optical. This includes telephone, security systems, cable television, and multipurpose fiber optic systems.

Plans shall clearly indicate the location of all communications systems affected by UTA construction and shall indicate the disposition of all facilities.

Each plan sheet shall include information concerning existing manholes and ducts; overhead poles; manhole number, size, and depth; number of cables; number of ducts and type; and number of vacant ducts. Details for duct banks and structures shall be included. For facilities to be built by other parties, including direct burial cables, the routing of all cables and the location of all structures shall be shown.

6.11 Water Mains

6.11.1 Standards

All relocations, replacements, or extensions of existing water systems shall meet the following criteria:

- Comply with applicable federal, state, and local standards.
- Design according to the criteria established by the governing municipality.
- Approved by the governing municipality/agency.

6.11.2 Requirements

Any replacement or relocation of existing water mains and appurtenances shall maintain capacity and functionality equivalent to existing facilities and meet current standards of the utility owner. Removed water mains shall be replace with pipes of equal or larger size. Water mains and fire hydrants shall not be taken out of service without prior approval of the jurisdictional agency and local fire marshal.

Water service to adjoining properties shall be maintained by supporting in place, providing alternate temporary facilities, or by connecting to other points. The construction of water services to neighboring properties shall comply with the applicable plumbing codes of the respective county or local jurisdiction.

Pipe used for water mains shall conform to the owning agency's specifications. Straight runs of pipe may either be of the mechanical joint or push-on type with a gasket. All valves and fittings shall be of the mechanical joint end type, with lined and coated fittings. Pipe with bends shall be designed to resist thrust forces through the use of thrust blocks, flanges, or restrained joint pipe.

Water mains shall be a minimum of 10 feet horizontally away from and 1½ feet higher than sanitary sewer lines. Separate trenches shall be provided.

Disinfection, pressure, and leakage tests of new water mains are required according to the AWWA Standard C651 or the owner's standards. The water shall be tested for potability by an approved Utah DENR laboratory. The utility owner shall be given the opportunity to witness the pressure and leakage tests.

6.12 Liquid-Petroleum Pipelines

6.12.1 Standards

Relocation or modification of liquid petroleum pipelines, if necessary, shall be performed by the pipeline owner. In instances where casing pipes must be extended to protect existing pipes, either UTA or its contractor can perform this work, provided they have the concurrence of the pipeline owner. Installation and location of Cathodic Protection Monitoring stations shall be coordinated with the utility owner. Work involving liquid petroleum pipelines shall conform to the following standards:

- "ANSI Standard for Liquid-Petroleum-Transportation Piping Systems Part B31.4"
- "API Recommended Practice for Crossing Highways and Railroads"
- U.S. Department of Transportation (USDOT) "Part 195 of Government Requirements for Transportation of Liquids by Pipeline"

The provisions of USDOT include:

- Pipelines installed within any railroad or street ROW shall have 100% of all girth welds tested non-destructively.
- Carrier pipes located longitudinally in or crossing any railroad ROW within a casing shall be subjected to hydrostatic testing.
- Carrier pipes shall be protectively coated and wrapped.
- Carrier pipe installed within a casing shall be manufactured to an acceptable specification and designed to operate at the appropriate stress level.

6.13 Streetlights and Traffic Signals

6.13.1 Standards

All relocations, temporary or permanent, and maintenance of streetlights and traffic signal equipment shall be in accordance with the requirements of the governing owner agency and/or municipality.

The contractor shall be required to protect existing streetlights and traffic signal equipment during construction. The designer shall indicate the work required for necessary modifications or relocations on the drawings.

6.14 Overhead Utility Lines

6.14.1 Standards

Modification of existing overhead utility lines, poles, and appurtenances, including service lines to adjoining properties, shall be performed by the facility owner in accordance with the laws and regulations of the appropriate jurisdiction, utility owners' standards, the National Electrical Safety Code, and appropriate railroad overhead wire standards including those of AREMA.

Poles supporting overhead facilities may be owned by one party and shared with or rented to others under mutual agreement. The designer shall identify the owners of all overhead wires and coordinate as needed to assure that the proposed design is mutually acceptable to all owners and UTA.

Clearances shall be in accordance with the standards adopted by the utilities involved. Standards specified in the National Electrical Safety Code shall be considered the minimum requirements with respect to any railroad ROW crossings and structures.

END OF CHAPTER 6.

DESIGN CRITERIA MANUAL

/ CHAPTER 7

STRUCTURAL

Table of Contents

CHAPTER 7 STRUCTURAL **1**

7.1 GENERAL 1
7.1.1 Introduction *1*
7.1.2 Design Codes, Manuals, and Specifications *1*
7.1.3 Responsibility for Geotechnical Information *2*
7.1.4 Loads and Forces *2*
7.1.5 Differential Settlement *8*
7.1.6 Earthquake (EQ) *8*
7.1.7 Horizontal Earth Pressure (E) *9*
7.1.8 Hydrostatic Pressure and Buoyancy (B) *9*
7.1.9 Wind Load on Structure (WS) *9*
7.1.10 Wind Load on Live Load (WL) *10*
7.1.11 Force from Stream Current, Floating Ice, and Drift *10*
7.1.12 Thermal Force (T) *11*
7.1.13 Pier Protection Walls *15*
7.2 SPECIAL DESIGN REQUIREMENTS 15
7.2.1 Vibration Limitations *15*
7.2.2 Track Work *15*
7.2.3 Fatigue *15*
7.2.4 Uplift *15*
7.2.5 Friction *15*
7.2.6 End Diaphragms *16*
7.2.7 Reinforced and Prestressed Concrete Design *16*
7.2.8 Emergency Access and Provisions *17*
7.2.9 Improvements on UPRR or Other Non-UTA Right-of-Way *18*
7.3 MATERIALS 18
7.3.1 General *18*
7.3.2 Fire Protection of Structures *18*
7.3.3 Structural Steel *19*
7.3.4 Reinforced and Prestressed Concrete *19*
7.4 EARTH RETAINING STRUCTURES 20
7.4.1 General *20*
7.4.2 Types of Retaining Walls, Abutments, and Wingwalls *20*
7.4.3 Soils and Geological Criteria *20*
7.4.4 Elastomeric Bearings *20*
7.4.5 Improvements on UPRR or Other Non-UTA Right-of-Way *21*

CHAPTER 7 STRUCTURAL

7.1 General

7.1.1 Introduction

This chapter outlines the primary design criteria for structures, which include bridges, stations, retaining walls, buildings, drainage structures, construction structures, and miscellaneous structures. All criteria within this chapter apply, with the sole exception being the overhead contact system (OCS) criteria, which is detailed in Section 12.5. For design scenarios not explicitly covered in this chapter, designers shall identify the appropriate technical sources for the design criteria and secure UTA's approval before implementation.

All structural designs for the UTA transit system shall adhere to these criteria to the maximum extent possible. In areas not covered by these criteria, designs shall follow the latest applicable municipal, county, state, and federal regulations and codes listed below.

7.1.2 Design Codes, Manuals, and Specifications

For most scenarios, structures supporting the BRT System are integrated with the adjacent roadway. In such cases, the governing codes, manuals, and specifications of the respective roadway jurisdiction shall be used. However, if a structure exclusively serves the BRT system, it shall be designed according to the most recent version of the codes, manuals, and specifications detailed in this chapter.

Designs shall conform to the latest editions of the specified standards, codes, and guidelines. Where multiple sources apply, the most stringent listed standard prevails.

- American Railway Engineering and Maintenance of Way Association (AREMA) *Manual for Railway Engineering* (latest revision), referred to in this document as AREMA Manual
- American Association of State Highway and Transportation Officials (AASHTO) "LRFD Bridge Design Specifications," referred to in this document as AASHTO Specifications (LRFD BDS)
- International Building Code (IBC)
- American Society of Civil Engineers Minimum Design Loads and Associated Criteria for Buildings and Other Structures (ASCE/SEI 7)
- Utah Department of Transportation "Structures Design and Detailing Manual"

- UPRR-BNSF Guidelines for Railroad Grade Separation Projects
- AASHTO Standard Specifications for Structural Supports for Highway Signs, Luminaires, and Traffic Signals
- Minimum Design Loads for Buildings and Other Structures, ASCE/SEI 7
- AASHTO LRFD Guide Specifications for the Design of Pedestrian Bridges (GSDPB)
- AASTHO Guide Specifications for LRFD Seismic Bridge Design (LRFD SEIS)
- Aluminum Design Manual (AA ADM)

7.1.3 Responsibility for Geotechnical Information

If provided by UTA, previously gathered geotechnical information may be used for informational purposes unless contract documents state otherwise. Designers are responsible for obtaining any required geotechnical data for design and construction.

7.1.4 Loads and Forces

Unless specified otherwise, load requirements from the referenced standards, codes, and guidelines shall guide the structural design. This includes load requirements for electrical, signal, and communications equipment as applicable.

7.1.4.1 Dead Load

Dead loads account for the actual weight of the structure and all its permanent components, such as track work, walls, floors, partitions, roofs, electrification, safety walks, pipes, conduits, cables, utilities, services, and all other permanent construction and fixtures. Given the constant presence of dead load stresses, structures shall be designed to withstand them.

Dead load calculations should be based on the weights of materials and permanent fixtures. Refer to ASCE/SEI 7 for standard material unit weights. Ensure checks on actual weights where variations may influence design adequacy or if construction deviates from standard practices. The catenary support system's dead load for electrification shall be determined by the systems designer.

7.1.4.2 Live Load (LL)

Live loads encompass non-permanent loads such as machinery, equipment, sorted materials, persons, transit vehicles, freight train, other moving objects, construction loads, and loads due to maintenance operations. Bridges

expected to carry freight traffic, either during construction or operation, shall adhere to AREMA E-80 loadings. Refer to AREMA for design loadings of rolling stock and maintenance equipment.

The loading criteria to which the structures are designed shall appear on the structural drawings. Where required by design conditions, concrete placing sequence shall be indicated on the plans or in the supplementary conditions.

7.1.4.3 CRT Live Loads

Designs for structures that support commuter rail vehicles shall be designed for the loading diagrams shown in Figure 7-1.

Figure 7-1: CRT Load Diagram

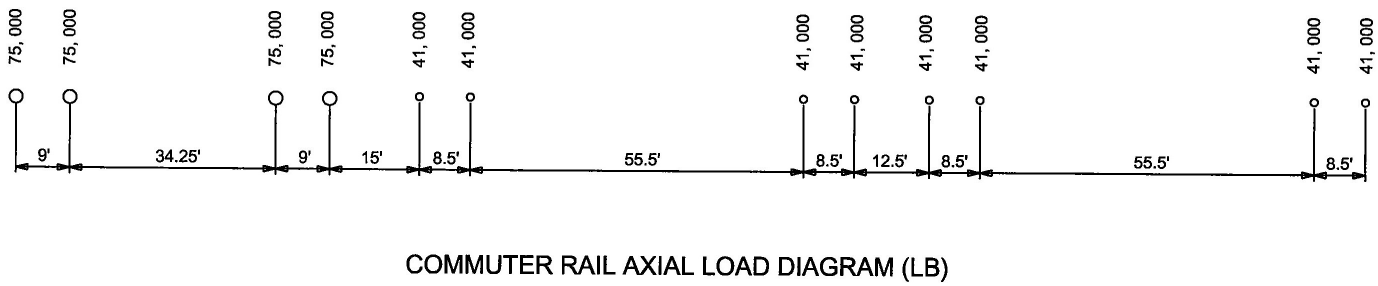

7.1.4.4 LRT Live Loads

Structures or parts of structures subjected only to LRT loadings or to LRT and railroad loadings shall be designed considering loads due to system-wide elements such as electrification, signalization, communications equipment, and the other loads specified in the applicable codes. Light rail transit vehicle wheel loads shall be distributed as explained below:

- Where a wheel load is transmitted to a slab through rail mountings placed directly on the slab, the wheel load shall be assumed to be uniformly distributed on the slab over a 3-foot length of rail and a 1 foot 2 inches width normal to the rail and centered at the rail.
- In addition, the slab shall be designed to support an accidental concentrated load as defined in Section 7.5.4.

The effective distribution width (E) of this concentrated load shall be as outlined below.

For deck between supports:

$E = 0.58 \cdot S$ (up to 3 feet), where S is the span length between support centerlines.

For cantilever decks:

Moment: $E = 2.5 + 0.2 \cdot X$
Diagonal Tension: $E = 4 \cdot t$

Where,

X is the distance from load to point of support, in feet
t is the thickness of deck, in inches

Refer to Figure 7-2 for car dimensions and weights. Any combination of train lengths and loading which produces the critical design loading shall be used for structural design.

Figure 7-2: Light Rail Vehicle Design Loading (LRV Vehicle Only)

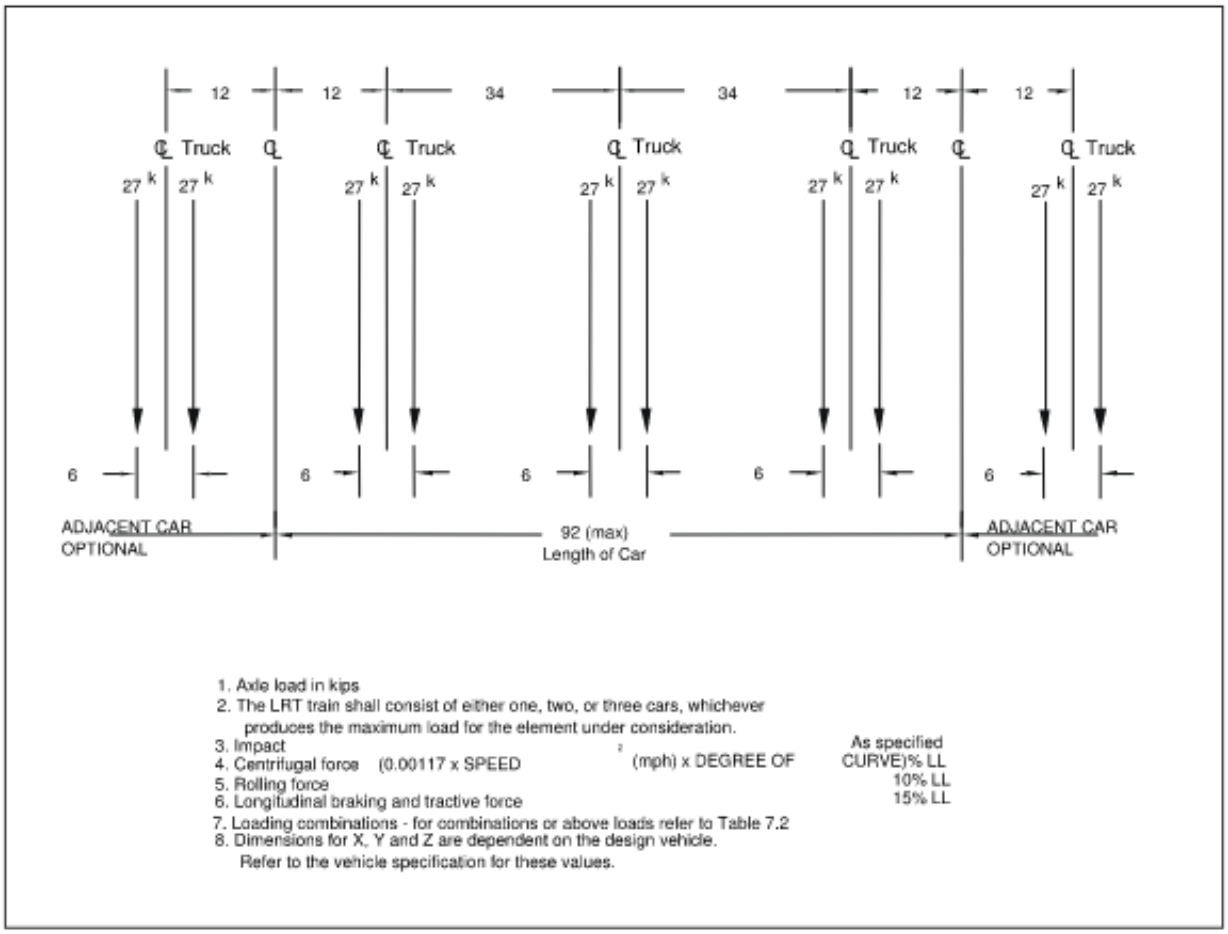

7.1.4.5 Miscellaneous Live Loads

7.1.4.6 Pedestrian Areas

Design station platforms, pedestrian ramps, mezzanines, and other pedestrian-only areas for a uniform load of 150 psf. For areas accessible to cars and trucks, design for a minimum uniform load of 250 psf. Stairways shall be designed for a uniform load of 100 psf or a concentrated load of 300 pounds on the center of stair treads, whichever is critical.

For structures that include a pedestrian component, 1/1000 bridge deflection and 50 in/sec^2 acceleration should be used for design.

7.1.4.7 Storage Space and Machinery Rooms

Electrical equipment rooms, service rooms, storage space, and machinery rooms shall be designed for a uniform load of 250 psf. Design load shall be increased if storage or machinery loads dictate.

7.1.4.8 Railings

Railings on station platforms shall be designed to sustain simultaneous horizontal forces of 150 plf and vertical forces of 100 plf at their tops. Railings in other places of public assembly shall be designed in accordance with local codes. For equipment rooms and workspaces, railings shall withstand a 200-pound force applied from any direction at any point. Rail members situated more than 5 feet above walkways are exempt from these requirements.

7.1.4.9 Posts

Design posts to counter a horizontal force calculated as WL, where W is the maximum uniform horizontal force on each railing, and L is the spacing between posts.

7.1.4.10 Service Walks

Service walks shall be designed to support a uniform load of 85 psf.

7.1.4.11 Derailment Load (DR)

The vertical derailment load shall consist of the design live load maximum vehicle weight, multiplied by an impact factor. An impact factor of 100% shall be used for the deck design (multiply vehicle weight by 2.0), and an impact factor of 30% shall be used for the cf girder and applicable substructure design (multiply wheel load by 1.3). The derailment load shall be as follows:

$$DR = LL + ID, \text{ where } ID = \text{Derailment impact}$$

The derailment load shall be applied to all superstructure elements and specific substructure elements as required in Section 7.1.4.6. Assume these loads can act anywhere on the deck within the curb lines, with their longitudinal axis parallel to the track.

When assessing a superstructure-to-substructure component that supports two or more tracks, only one train on one track shall be considered to have derailed, with the other track being loaded with a stationary work train,

including locomotives, cranes, flats, etc., or another LRV vehicle, ready to receive passengers from the derailed vehicle. The design load used shall be the greatest of these loadings.

All structural elements shall be assessed assuming simultaneous application of all derailed wheel loads. The reduction of positive moment in continuous slabs due to derailed wheel loads in adjacent spans shall not be allowed.

7.1.4.12 Impact (I)

Impact loads are statically equivalent dynamic loads resulting from vertical acceleration of the LL.

7.1.4.13 Impact Considerations

Impact considerations for aerial structures supporting railroad train loading and/or light rail transit loading shall meet the requirements as follows:

- Impact shall be applied to the superstructure and, in general, to structural members extending to the top of footings. This includes the portion above ground of concrete or steel piles rigidly connected to the superstructure in rigid frame or continuous designs. Impact shall not be considered for abutments, retaining walls, wall-type piers, piles, footings, and service walks, except for the portion of piles rigidly connected to the superstructure.
- The impact force shall be applied at the top of the low rail, distributed the same as outlined for axle loads.
- In addition to vertical impact, a horizontal impact (or nosing) force (NF) equal to 10% of the railroad train or light rail transit design load shall be applied. This force shall be equally distributed to the individual axles of the vehicle and shall be assumed to act in either direction transverse to the track at the top of the low rail.
- Structures supporting special vehicles, such as moving equipment, or other dynamic loadings that cause significant impact shall conform to the building code of the locality or, if not covered by code, shall be considered individually using the best technical information available.
- Impact shall not be considered for stairways, mezzanines, station platforms, or other pedestrian areas.

Impact loads shall be considered in the LRT design as described below.

Vertical impact loads for LRT-only aerial structures shall be considered in the design as follows:

- Impact force for the design of simply supported longitudinal girders.

- I = 30% of the total light rail transit vehicle or freight car loading.

For structures with longitudinal girders continuous over supports, including cantilever systems:

- I = 40% of the total light rail transit vehicle's loading for girders in regions of negative bending and for the supports where the girders are continuous.
- I = 30% of the above loading for continuous girders in regions of positive bending and for the supports where the girders are discontinuous.
- These constant vertical impact factors apply where the unloaded natural frequency of first mode of vibration of the longitudinal girders is not less than 2.5 cycles per second.

Vertical impact loads for structures supporting freight trains shall be in accordance with AREMA.

7.1.4.14 Centrifugal Force (CF)

Centrifugal force shall be determined in accordance with AREMA.

7.1.4.15 Rolling Force (RF)

A force equal to 10% of the loading per track shall be applied downward on one rail and upward on the opposing rail for all tracks. The rolling force shall be considered in a similar fashion as the longitudinal force is considered in the loading combinations of AASHTO Article 3.22.1.

7.1.4.16 Longitudinal Force (LF)

Longitudinal force shall be in accordance with latest edition of AREMA.

7.1.5 Differential Settlement

Load(s) induced on the structures by permissible differential settlement shall be considered in the loading combination. This load shall be treated in a manner consistent with shrinkage and thermal forces.

7.1.6 Earthquake (EQ)

Bridges shall be designed in compliance with the AASHTO Guide Specifications for LRFD Seismic Bridge Design. Standalone BRT structures shall be designed to an "essential" bridge classification as defined by the UDOT Seismic Bridge Design Criteria.

7.1.7 Horizontal Earth Pressure (E)

Design structures retaining earth to withstand side pressure from the abutting earth and load surcharges resting on abutting earth. Consideration shall be given to multi-layered effects where substantial differences in soil properties occur over the depth of the structures.

Light rail transit loading may be assumed as a uniform surcharge load equal to 3 additional feet of earth.

Live and dead loads from adjacent foundations of structures shall be considered in computing horizontal pressures.

Where railroad loading occurs, the surcharge shall be determined by AREMA.

7.1.8 Hydrostatic Pressure and Buoyancy (B)

Hydrostatic pressure and buoyancy shall be determined in accordance with AASHTO LRFD.

7.1.9 Wind Load on Structure (WS)

Bridge structures shall be designed to withstand wind loads. This encompasses uniform pressure acting on both the superstructure and substructure, as specified in AASHTO LRFD.

7.1.9.1 Wind Load on Catenary

Wind loading on catenary shall be considered in the design of both superstructure and substructure elements. The system designer shall determine the loads, including magnitude and location.

The wind load on the catenary shall be determined in accordance with AREMA, AASHTO, or IBC as applicable.

7.1.9.2 Wind Load on Superstructure

The wind load on the superstructure shall be determined in accordance with AREMA, AASHTO, or IBC as applicable.

7.1.9.3 Wind Load on Substructure

The wind load on the substructure shall be determined in accordance with AREMA, AASHTO, or IBC as applicable.

7.1.10 Wind Load on Live Load (WL)

The superstructure's design shall incorporate provisions for transverse and longitudinal horizontal wind loads as specified in this section.

These loads apply to the design of substructure elements supporting a single track. For the design of substructure elements supporting two tracks, these loads shall be increased by 30% where both tracks are loaded. This factor accounts fully for the shielding effect of vehicle-on-vehicle as the two trains run side by side.

The design shall include:

- A transverse horizontal wind load of 300 pounds per foot.
- A longitudinal horizontal wind load of 75 pounds per foot spanning the entire track length supported by the design element.

The transverse load shall be applied to the train as concentrated loads at the axle locations, in a plane 8 feet above the top of the low rail and normal to the track. The longitudinal force shall be applied to the rails and superstructure as a uniformly distributed load in a horizontal plane at the top of low rail.

7.1.11 Force from Stream Current, Floating Ice, and Drift

7.1.11.1 Stream Flow Pressure and Flooding (SF)

Structures located in flood plains may experience added load due to local flooding. Accordingly, their design should account for this potential loading as required by the structure type and site-specific conditions. Use official flood records to determine anticipated flood elevations. SF shall be included in the design of aerial structures where applicable. All piers and other portions of structures that are subject to flood forces shall be designed in accordance with the requirements outlined in AASHTO LRFD.

7.1.11.2 Force of Ice on Pier (ICE)

The force of ice on pier shall be determined in accordance with AASHTO LRFD.

7.1.11.3 Shrinkage and Creep Forces (S)

Shrinkage and creep forces shall be determined in accordance with AASHTO LRFD.

7.1.12 Thermal Force (T)

Account for stresses and deformations resulting from temperature fluctuations as detailed in this section.

7.1.12.1 Expansion Coefficients

The expansion coefficients are as follows:

Concrete

Temperature rise: 35 °F
Temperature fall: 45 °F
Coefficient of expansion: 0.0000060 inch/inch/°F

Steel

Temperature rise: 50 °F
Temperature fall: 80 °F
Coefficient of expansion: 0.0000065 inch/inch/°F

Rail

Temperature rise: 70 °F
Temperature fall: 70 °F
Coefficient of expansion: 0.0000065 inch/inch/°F

7.1.12.2 Direct-Fixation Temperature Forces

For direct-fixation track, provision shall be made for transverse and longitudinal forces due to temperature variations in the rail. These forces shall be applied in a horizontal plane at the top of the low rail.

7.1.12.3 Transverse Force

For equal adjacent spans, the transverse force in pounds per span of structure per rail shall be determined by the following formula:

$$T = 2 \cdot E \cdot A \cdot C \cdot \Delta T \cdot \sin(\tfrac{1}{2}) \cdot (L/R) \cdot (180/\pi) \text{ [lbs]}$$

Where,

E = Young's modulus of rail (in psi)

A = Rail cross-sectional area (in square inches)

C = Coefficient of expansion of rail

ΔT = Temperature differential (in °F)

L = Span length along curve (in feet)

R = Curve radius (in feet)

π = 3.14159

For structures with unequal adjacent spans, the transverse force shall be resolved into components parallel and perpendicular to the pier at each rail fastener and then summed. See Figures 7-3 and 7-4.

Figure 7-3: Lateral Restraint of Transverse Force in Rail by Single Fastener

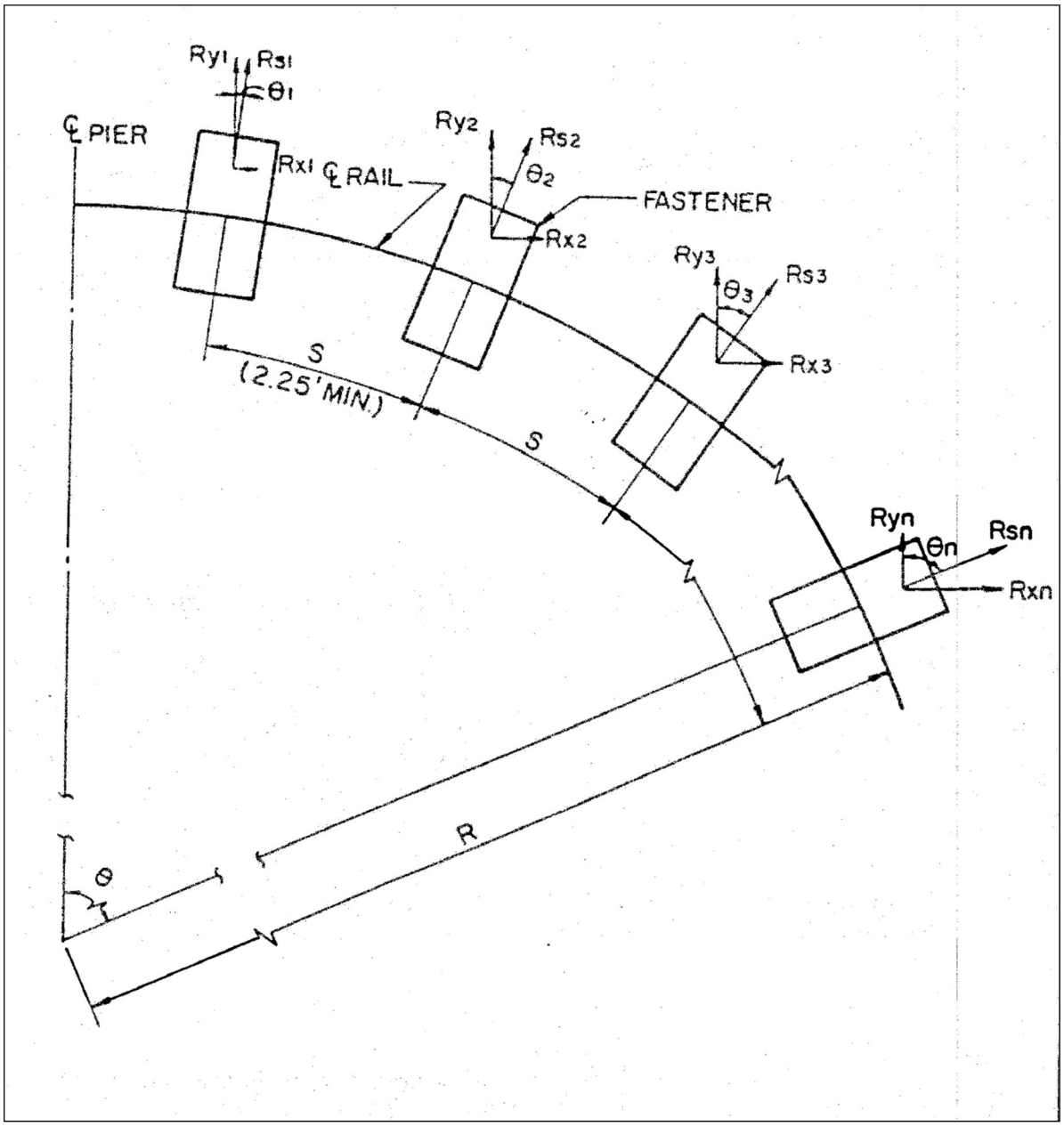

Figure 7-4: Lateral Restraint of Transverse Force by Fastener

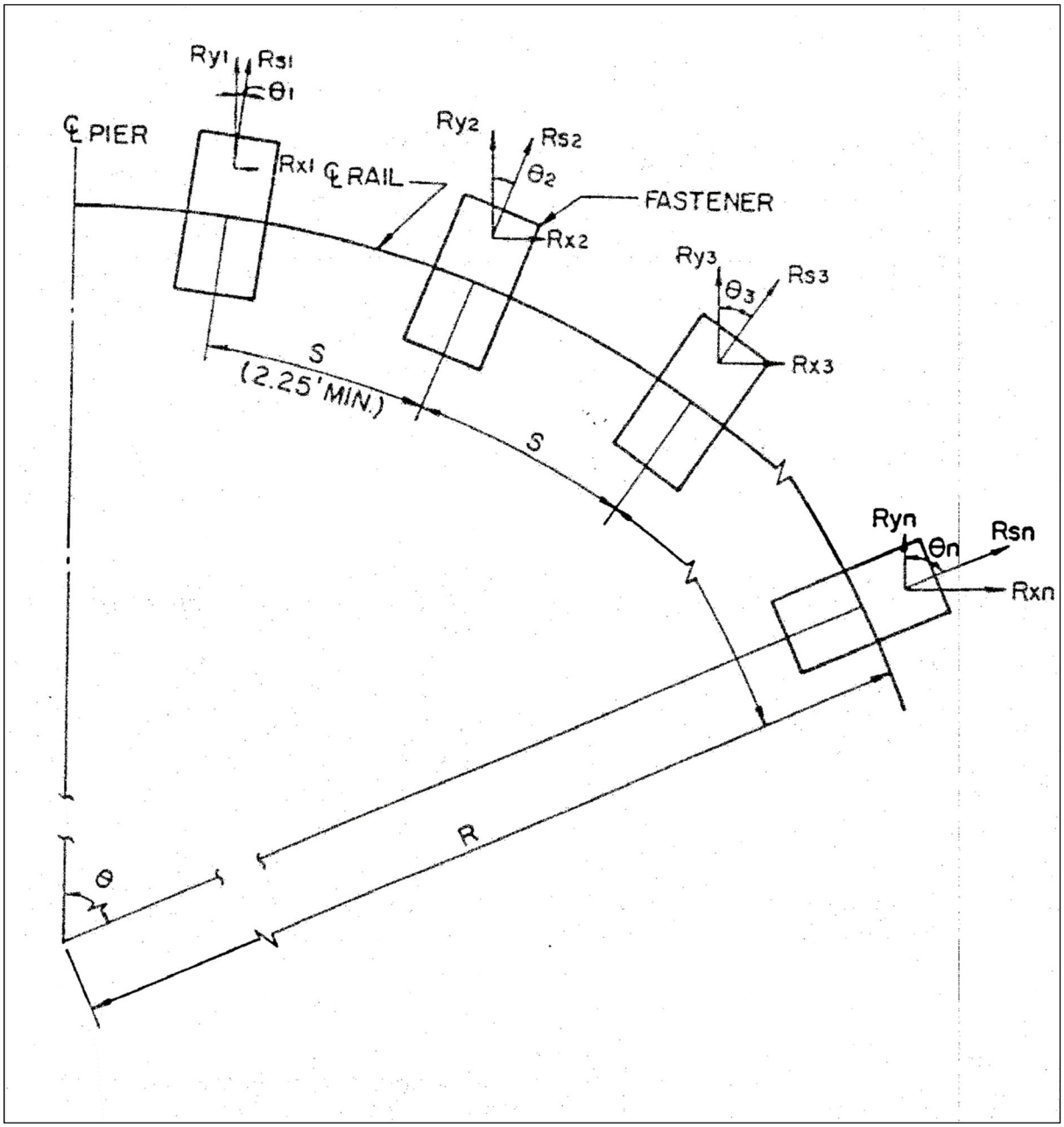

7.1.13 Pier Protection Walls

Pier protection walls shall be provided where highway overpasses or other structures span rail lines, and horizontal clearance between an interior bridge support or pier and the rail line is insufficient to minimize the risk of bridge collapse as a result of an impact from a shifted load on a train or a train derailment. See UPRR-BNSF Guidelines for Railroad Grade Separation Projects for design requirements.

7.2 Special Design Requirements

7.2.1 Vibration Limitations

Aerial structures shall be designed to mitigate dynamic interactions between their girders and light rail transit vehicles. Ensure the unloaded natural frequency of the first vibration mode of longitudinal girders is not less than 2.5 cycles per second. Furthermore, in a series of three consecutive spans, no more than one span shall have a first mode frequency less than 3.0 cycles per second.

7.2.2 Track Work

Consideration shall be given to the thermal force interaction between structural components and the track work system.

7.2.3 Fatigue

Consideration shall be given to the stress level changes resulting from light rail transit vehicles passing over structures. Over the life of the structure, 4.5 million cycles of maximum stress shall be used in estimating the number of repetitive maximum stress cycles.

7.2.4 Uplift

Provision shall be made for adequate attachment of the superstructure to the substructure should any combination of loading produce uplift at any support. Where DL, E, or any of other loadings tend to reduce the uplift effect, the corresponding load factors shall be taken as 0.9 for DL, 0.75 for E, and 0 for other loadings.

7.2.5 Friction

Where applicable, friction shall be considered in the design.

7.2.6 End Diaphragms

End diaphragms shall be designed for a jacking force equal to the DL end reaction.

7.2.7 Reinforced and Prestressed Concrete Design

Reinforced and prestressed concrete members for light rail transit aerial structures shall conform to the requirements of Section 7.3.4 except as modified below.

7.2.7.1 Camber and Deflections

As a guide in design, the total long-term predicted camber growth less deflection due to full dead load should be limited to 1/2,000 of span length.

7.2.7.2 Live Load Deflections

Girders, whether of simple or continuous spans, shall be designed so that the deflections due to live load plus impact shall not exceed 1/1,000 of the span length. The deflection of cantilever arms due to live load plus impact shall be limited to 1/375 of cantilever arm.

7.2.7.3 Longitudinal Tension Stresses in Prestressed Members

Longitudinal tension stresses shall not be permitted under service loadings.

7.2.7.4 Shrinkage and Creep

Stresses and movements resulting from concrete shrinkage and creep shall be considered in the design and included in all load combinations. The shrinkage coefficient shall be assumed to be 0.0002 inches per inch for both prestressed and reinforced concrete.

7.2.7.5 Structure Deformations and Settlements

All structure deformations, including foundation settlement, shall be considered, not only for their effect on structural behavior, but also for their effect on track work. The control of deformations through proper structural design is of paramount importance in obtaining acceptable riding quality for the light rail vehicles.

7.2.7.6 Foundations

Foundations for girder spans up to 150 feet in length shall not have total settlements greater than 1 inch nor differential settlements greater than ¼ inch. For spans over 150 feet in length, the designer shall develop settlement values that meet the approval of UTA. Any proposed deviation from the settlement limits shall be submitted to UTA for prior approval. The designer shall consider the use of approach slabs to mitigate the effects of the differential settlement on the tracks.

7.2.7.7 Lateral Resistance

Consideration shall be given to the ability of piles or drilled caissons to resist lateral loads. Where the lateral resistance of the soil surrounding piles is inadequate to counteract the horizontal forces transmitted to the foundation or where increased rigidity of the entire structure is required, battered piles shall be used in a pile foundation. Battered piles shall adhere to a slope gradient not exceeding 1 horizontal to 3 verticals. Where battered piles are to be used, consideration shall be given to the possibility of such battered piles encroaching on property outside the right-of-way lines.

The axial loads on piles and caissons shall be determined by static analysis of the moment-resistant group, by the method of the elastic center, or by any other satisfactory method. Each member, vertical or battered, in a pile or drilled caisson group may be assumed to have horizontal resistance capacity in addition to the horizontal component of the axial load on the battered members, equal to the least of the following values:

- Capacity recommended by the geotechnical consultant.
- Capacity of the pile or caisson as a structural member.
- 10% of the member's design compressive capacity perpendicular to the strong axis only.

Unless a pile or caisson is installed to a sufficient depth in competent material to develop fixity, it shall be assumed to have no capacity to resist lateral loads in bending.

7.2.8 Emergency Access and Provisions

The ability to evacuate passengers from disabled trains and for emergency responders to access disabled trains shall be considered in the design of structures. In particular, for locations incorporating lengthy elevated structures and other track segments with limited access, a plan for emergency access shall be developed, and infrastructure provisions incorporated into the design. The identification of locations meeting this requirement shall be at the discretion of the UTA.

The plan, and components of the plan, shall be based on good practice, AREMA (which requires a means of egress for passengers from a disabled train), NFPA 130, local fire codes, and other applicable sources. The plan is subject to the approval of local emergency responding agencies, which shall be solicited for input during the design phase.

7.2.9 Improvements on UPRR or Other Non-UTA Right-of-Way

Structures near or adjacent to UTA, but not owned by UTA, are the property of the UPRR or other owners. All railroad-related improvements not on UTA right-of-way are subject to the review and approval of UPRR or the respective owner. UTA or its representatives will provide coordination and oversight of the review process, but the designer shall be responsible for the provision of a design acceptable to UPRR or the respective owner. The design of bridge and structural improvements on or affecting adjacent UPRR trackage shall minimize operating impacts on UPRR operations.

7.3 Materials

7.3.1 General

All materials shall conform to the applicable specification and codes listed in Section 7.2. If significant savings can be achieved using different material than those specified in this manual, while providing at least the same level of performance and durability, the designer may substitute alternate material standards after receiving written approval from UTA.

7.3.2 Fire Protection of Structures

All materials, including thermal and acoustical insulation of ductwork and piping, shall be inorganic in composition and shall contain no organic binder. All material other than concrete, masonry, tile, metals, and similar materials shall have a certified classification of non-combustibility as defined by ASTM E136, *Determining Non-Combustibility of Elementary Materials*, modified by the further requirements that no flaming will be permitted during any portion of the test period. Flame-proofing of the material is not acceptable. In cases where no suitable material conforms with these requirements, very minor quantities of an accessory material may be permitted if prior approval in writing is obtained from UTA.

Underwriters' Laboratories, Inc. label or listing, satisfactory test results from the National Bureau of Standards or certified report from an approved testing laboratory will be required to indicate that fire hazard ratings for material proposed for use conform to the above.

7.3.3 Structural Steel

Considerations shall be limited to the following types of structural steel:

- Structural Steel: Use AASHTO M270, Grade 36, Grade 50, or Grade 70.
- Connections: Shop connections shall be welded unless otherwise indicated on the contract drawings. All welding shall be in accordance with the current code or specifications of the American Welding Society, D1.1.
- Field connections shall be designed for high-strength bolts unless otherwise indicated on the contract drawings. High-strength bolts shall be ASTM A325 or A490 bolts.
- Other types may be used only with the approval of UTA.

7.3.4 Reinforced and Prestressed Concrete

7.3.4.1 Cements

Portland cement shall be used in accordance with ASTM C150. Type II Portland cement shall be specified for all concrete construction unless otherwise noted on the contract drawings or specifications.

7.3.4.2 Reinforcing Steel

Use reinforcing steel conforming to AASHTO M31, Grade 60, except as noted below.

Use steel deformed bars, conforming to ASTM A706, for substructure elements, including internal bent caps, piles, and other capacity-protected members, where the design load will exceed elastic limits and where plastic hinges may form.

Use bars that are either uncoated corrosion-resistant, hot-dip galvanized after fabrication, or epoxy-coated, except for bars used in drilled shafts or piles.

Stainless steel reinforcing conforming to ASTM A 955 Type XM-28, Grade 60, may be used in bridge decks, approach slabs, sleeper slabs, and parapets.

For prestressed concrete, the grade of steel shall be as required by the design. Unbonded and ungrouted prestressing steel shall not be used.

7.4 Earth Retaining Structures

7.4.1 General

This section establishes criteria for the design of retaining walls and other earth retention structures. Retaining walls shall be designed based on the specific soil characteristics of the site and backfill materials.

7.4.2 Types of Retaining Walls, Abutments, and Wingwalls

Retaining wall types, including (but not limited to) cast-in-place reinforced concrete cantilever, mechanically stabilized earth (MSE), and soil nail, may be used if they prove cost-effective and practically feasible within the site constraints. Rock walls should not be used unless approved by UTA.

7.4.3 Soils and Geological Criteria

Earth and water pressures on earth retaining structures can vary significantly based on geographical location. Earth pressures and other soil parameters shall be determined by the designer in consultation with the geotechnical consultant. Allowable bearing values for rock or earth in its natural bed shall be based on the above information; otherwise, they shall not exceed the limits given by the local building code, as applicable.

7.4.4 Elastomeric Bearings

The design of all elastomeric bearings shall consider a minimum shape factor of three. This encompasses considerations for bearing hardness, bearing replacement and inspection, shear displacement, vertical displacement, rotational capacity, compressive stress, reinforcement strength, stability, and slip.

The material shall be steel laminated 100% virgin chloroprene (neoprene) or natural rubber. Elastomers with a nominal durometer of 70 or higher shall not be used.

The design of elastomeric bearings and TFE bearing surfaces shall comply with AASHTO standards.

Travel in any elastomeric bearing of a supported span shall be assumed to be a minimum of ⅛ inch per 10 feet of beam length. The minimum shape factor shall be three for pads for which a compressive stress/strain diagram

has been derived by testing elastomeric bearings of actual size or those slightly reduced. If the diagram is based on samples reduced in size by a factor of 2 or more, the minimum shape factor shall be 5. Products without compressive stress/strain diagrams or those claimed to be independent of the shape factor shall not be used.

Every bearing shall be proof tested to 150% of the design load. If bulging patterns imply poor laminate bond, or if there are three separate surface cracks greater than 0.08 inch wide and 0.08 inch deep, the bearing shall be rejected.

Bearings shall have built-in taper where nonparallel load surface would otherwise produce a compressive deflection of 0.06·T under dead load. Such taper shall be limited to ⅝ inch per foot.

7.4.5 Improvements on UPRR or Other Non-UTA Right-of-Way

Structures near or adjacent to UTA, but not owned by UTA, are the property of the UPRR or other owners. All railroad-related improvements not on UTA right-of-way are subject to the review and approval of UPRR or other owner. UTA or its representatives will provide coordination and oversight of the review process, but the designer shall be responsible for the provision of a design acceptable to UPRR or other owner. The design of bridge and structural improvements on or affecting adjacent UPRR trackage shall minimize impacts on UPRR operations.

END OF CHAPTER 7.

DESIGN CRITERIA MANUAL

/ CHAPTER 8

STATIONS AND STOPS

Table of Contents

CHAPTER 8 STATIONS AND STOPS 1

8.1 GENERAL 1
8.1.1 Scope 1
8.1.2 Codes and Standards 1
8.1.3 General Design Parameters 2
8.2 BRT PLATFORMS 3
8.2.1 Configuration 3
8.2.2 EV Bus Charging 6
8.3 CRT PLATFORMS 6
8.3.1 Configuration 6
8.4 LRT PLATFORMS 8
8.4.1 Configuration 8
8.5 STREETCAR PLATFORMS 9
8.5.1 Configuration 9
8.6 GENERAL STATION REQUIREMENTS 10
8.6.1 Platform Surface 10
8.6.2 Fare Vending Equipment 10
8.6.3 Amenities and Provisions 11
8.6.4 Signing and Communications 11
8.6.5 Public Address (PA) System 13
8.6.6 Advertising 14
8.6.7 Railings 14
8.6.8 Maintenance Space and Procedures 14
8.6.9 Circulation Elements 14
8.6.10 Lighting 18
8.6.11 Other Station Considerations 22
8.6.12 Crime Prevention and Vandal Resistance 25
8.6.13 General Materials and Finishes Guidelines 26

CHAPTER 8 STATIONS AND STOPS

8.1 General

8.1.1 Scope

This section establishes specific guidelines and standards for the design of stations. Stations will typically be at-grade (except in special cases), standardized, and cost-effective in design. Elements discussed in this section include the design of platforms and platform access.

The design of the stations shall be standardized to the extent possible. Equipment, shelters, platform features, structural elements, and signage used shall be the same system-wide and compatible with UTA's branding identity. Deviations from standard design elements may be required for specific sites but shall be approved by UTA before design proceeds.

8.1.2 Codes and Standards

Applicable codes and standards include the most current edition of the following documents:

- International Building Code (IBC)
- Uniform Plumbing Code
- Uniform Mechanical Code
- NFPA, Life and Safety Code
- NFPA, Life Safety for Transit Systems
- Uniform Fire Code
- Uniform Federal Accessibility Standards
- ANSI A 117.1
- Occupational Safety and Health Standards (OSHA) (29FR Part 1910)
- Uniform Electrical Code
- Americans with Disabilities Act (ADA)

Where no provisions are made in the codes for particular features of the design, the best architectural practice shall be followed, with the prior approval of UTA.

8.1.3 General Design Parameters

The facilities shall efficiently, economically, safely, conveniently, and comfortably serve the needs of patrons. These stations shall also provide for the traditional requirements of public transit systems: identity in neighborhoods or downtown areas as a location for public transit, shelter from the elements, and cover and/or screening from weather conditions.

In designing the facilities, the anticipated growth and long-term life of the system shall be considered. Function and life cycle considerations are important, as are aesthetics and the overall quality and character of the facilities. Station design shall be compatible in design with the immediate vicinity and reflective of the regional context of the Wasatch Front.

Generally, there shall be canopies over portions of each platform, including the ticket vending area. They shall be designed to allow snow and ice to melt without dropping on the patrons or platforms. The canopies will be of uniform design. The canopies shall be composed of durable components currently in use by UTA, and economical to repair or replace. All items on the platform, including the canopy columns, shall not conflict with ADA clearance requirements.

The stations in the system are functional spaces for patron circulation, waiting, and access to the transit vehicle. Therefore, the stations shall be designed as efficient conduits to accommodate peak demands without undue delay.

The design of stations should incorporate the following sustainable design practices:

- Integrate transit with community development.
- Improve the customer experience.
- Increase non-motorized accessibility to stations (biking, walking).
- Optimize energy use to reduce the environmental footprint.
- Utilize materials with superior service lives that are environmentally and economically superior.
- Enhance the quality of life of the transit user.

8.2 BRT Platforms

8.2.1 Configuration

Platforms shall provide level boarding. Disabled persons will be able to board the BRT vehicle by utilizing a passenger deployable bridge plate that spans the gap between the bus and the platform. For additional detail, refer to Chapter 11 of this manual.

The platform length available for boarding and alighting shall be determined based on peak hour boarding with consideration of projected boardings for special events. The minimum length of the platform shall be designed to the length of the project design vehicle.

There are three typical platform types:

(1) Center platforms
(2) Far side split center platforms
(3) Far side split side platforms

8.2.1.1 Center Platform

The typical center platform width is nominally 14 feet and shall consider location, configuration, current ADAAG accessibility guidelines, and clear space around station amenities and columns. In locations of anticipated large special event loadings, an analysis shall be performed to determine if the station shall be enlarged to maintain an acceptable pedestrian density.

This platform type consists of a single platform, located between the roadway traffic lanes, thus serving buses operating in both directions. Center platforms shall be used wherever possible in the interest of passenger convenience. The station is typically accessed from paved walkways connecting the platform end across the roadway to an adjacent sidewalk, serving as the station entrance.

Accessible ramps at one platform end connect to the roadway crossings, allowing full access to wheelchair users.

Unless the running way includes directional cross-overs on both approach ends of the platform, loading and alighting on center platforms will be on the left side of the BRT vehicle. This limits the type of vehicle that can operate in the corridor to vehicles with left-side doors.

Where directional crossovers are needed, they should use red paint, pavement message arrows, and signing.

A typical center platform station is shown in Figure 8-1.

Figure 8-1: Typical Center Platform Station

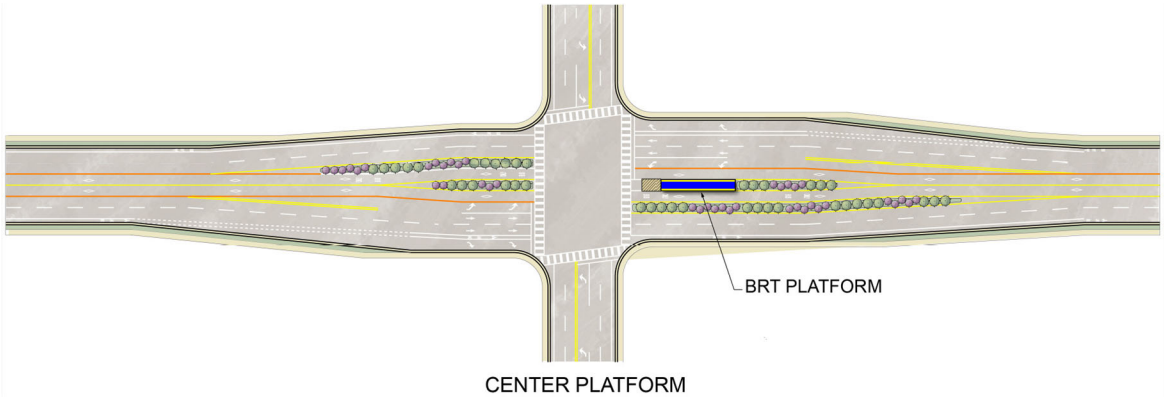

8.2.1.2 Far Side Split Center Platforms

Far side split center platforms are situated between the center median running way and the automobile traffic. Each station location has two platforms on opposite sides of the intersection, often in the "shadow" of the left turn pocket for automobile traffic. The typical platform width is nominally 12 feet. Because far side split center platforms are immediately adjacent to traffic, each platform shall provide a speed-appropriate barrier or separation on the platform edge next to traffic to protect transit patrons as well as motorists. Clearances from travel lane to barrier or separation shall conform to roadway requirements. Far side split center platforms board and alight on the right side of the BRT vehicle.

A far side split platform station is shown in Figure 8-2.

Figure 8-2: Far Side Split Platform Station

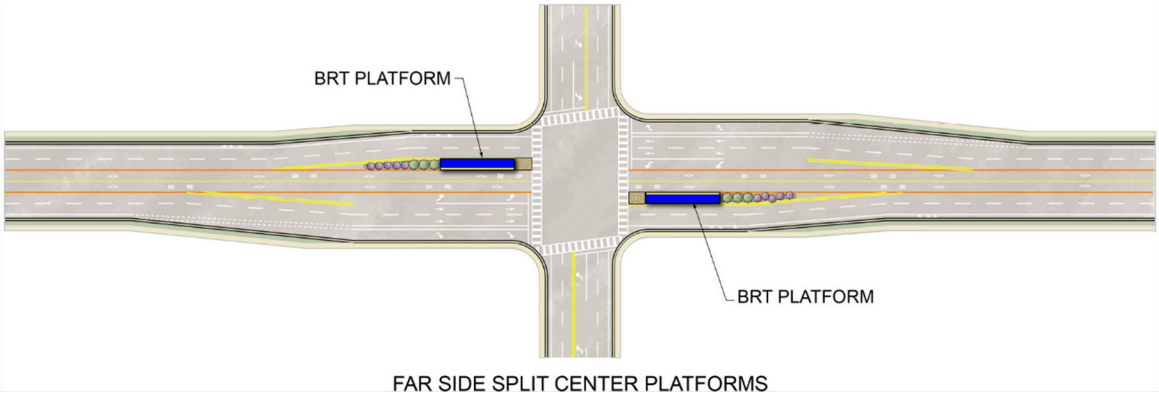

8.2.1.3 Far Side Split Side Platforms (Curbside)

Far side split side platforms (curbside) are on the roadway edge in areas where the running way is on the outside of traffic, or where the bus is running in mixed traffic with automobiles. These platforms are typically integrated into the sidewalk and are usually higher than the typical sidewalk.

This elevation difference can be accommodated by either providing railing between the elevated platform and sidewalk or by raising the entire sidewalk to the height of the platform. Far side split side platforms (curbside) board and alight on the right side of the BRT vehicle.

A far side split side platform (curbside) station is shown in Figure 8-3.

Figure 8-3: Far Side Split Side Platform (Curbside) Station

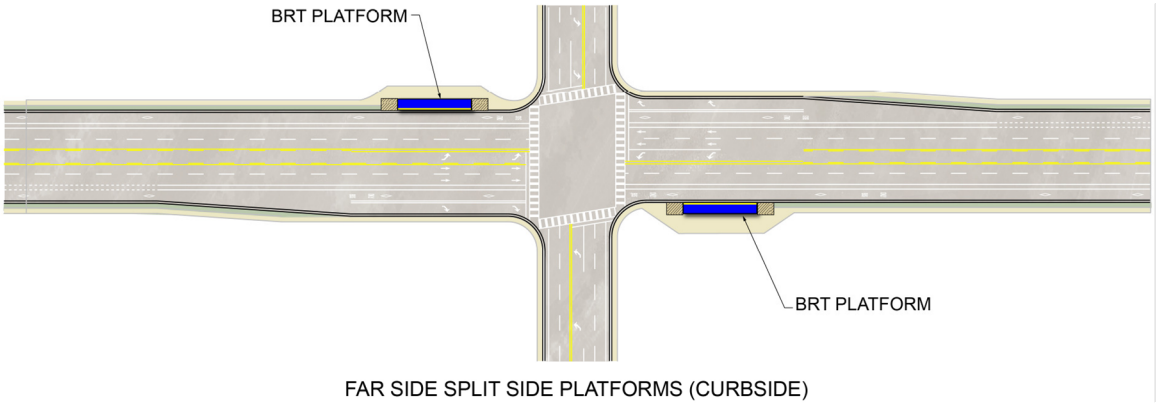

8.2.1.4 Near Side Platforms

Because far side platforms have improved performance with Transit Signal Priority (TSP), near side stations shall be used only with approval by UTA.

8.2.1.5 Platform Height and Offsets

- The platform height shall be 12 inches above the top of roadway surface to accommodate level boarding.
- All platforms shall have a drainage cross slope to the running way of 1–2%.
- The platform shall not have a slope steeper than 2% in any direction except on ramps.

8.2.1.6 Edge Treatment

The platform edge shall include a 5 ½-inch kick-out that includes a 2-inch x 6-inch docking guide strip to protects the overhang of the bus from the high platform. The docking guide strip shall extend a minimum of 15 feet from the approach end of platform.

8.2.2 EV Bus Charging

EV bus charging should be planned at all BRT end-of-line stations and any stations that include a park-and-ride lot. A minimum of two 300 kWh chargers should be included at each location.

8.3 CRT Platforms

8.3.1 Configuration

Generally, stations shall be based on one of two types–center platform (preferred where possible) or side platforms (alternative where required). These are surface stations and consist of boarding platforms, canopies, and other appurtenances located within the commuter rail corridor right-of-way. Stations with grade-separated pedestrian concourses (above or below grade) linking station entrance areas to the platforms shall account for vertical circulation features (e.g., stairs, elevators, and escalators).

The trackway, on both sides of the station platform, shall be fenced to prevent crossing of the trackway onto the platform. The fencing shall be placed along the entire platform length. Fencing shall be 48-inch high, black vinyl-coated chain link, with 1-inch openings between the platform and station parking area. Fencing shall be installed in curbing or in a concrete strip for increased weed control. Between the commuter rail track and UPRR track, fencing should be 10-feet high and galvanized with 1-inch openings. Fencing will extend the length of the platform and for an additional 100 feet in each direction. All platforms shall have drainage cross slope to the trackside of

1-2%. The front edge of the platform shall extend to within 3 inches of the threshold of the CRT vehicle doors to comply with ADAAG.

Station platforms shall be located on tangent trackage. The use of curved station platforms will require approval by UTA.

8.3.1.1 Platform Type 1: Center Platform

This platform type consists of a single platform, located between the two tracks, thus serving trains operating in both directions. This shall be used wherever possible in the interest of passenger convenience. The station is typically accessed from paved walkways connecting the platform ends across one track to an adjacent sidewalk serving as the station entrance and access to station area facilities.

Accessible ramps at both platform ends connect to the track crossings, allowing full access to wheelchair users.

Center platforms shall conform to the following criteria:

Table 8-1: Center Platforms Criteria

1.	Platform ultimate length (excluding pedestrian access landing) (parallel to track)	875 feet
2.	Platform height (above top of rail)	24 inches
3.	Minimum platform width	22 feet 2.3 inches
4.	Distance from platform edge to commuter rail track center	5 feet 4.85 inches
5.	Minimum distance between longitudinal fence and commuter rail track center	10 feet

8.3.1.2 Platform Type 2: Side Platforms

This platform type consists of two platforms, one on each side of a pair of tracks. Each platform serves one of the two tracks. Each track is generally (but not exclusively) used for train operations in a single direction. The platforms are typically accessed from a paved walkway at each end of the station connecting the platform to the sidewalk serving as the station entrance and access to station area facilities. All other aspects of this configuration are similar to those of Platform Type 1.

Side platforms shall conform to the following criteria:

Table 8-2: Side Platforms Criteria

1.	Platform ultimate length (excluding pedestrian access landing) (parallel to track)	875 feet
2.	Platform height (above top of rail)	24 inches
3.	Minimum platform width	15 feet
4.	Distance from platform edge to commuter rail track center	5 feet 4.85 inches

8.3.1.3 Edge Treatment

The platform edge shall be 5 feet 4.85 inches from the center of track, which includes a gap filler product approved by UTA. This gap filler shall be a minimum of 3.15 inches wide.

8.3.1.4 ADA Access

ADA access to and from the train should be via level boarding at the 24-inch platform level. The edge of the raised platform shall be situated 5 feet 8 inches from the centerline of the track.

The slope of ramps to the raised platform shall meet ADA requirements and preferably be no steeper than 1:15. These ramps should be strategically located to avoid conflicts with rail vehicle doorways. Additionally, the surface of ramps shall be slip-resistant. Canopies shall be placed in a spacing pattern devised for the entire length of the platform.

8.4 LRT Platforms

8.4.1 Configuration

Generally, there are two platform configurations for LRT: low-level center platforms and side platforms. However, the low-level center platform type is preferred. Disabled persons will be able to board the LRV by utilizing ramps on low-floor rail cars.

The platform length shall accommodate a 4-car train. Fencing shall be placed along the entire platform length to direct pedestrians to the appropriate platform entrance. Fencing shall be 42-inch height, black vinyl-coated chain link, with 1-inch openings and placed along the platform and station parking area. Fencing shall be installed in

curbing or in a concrete strip for increased weed control. Fencing shall be grounded along the ROW for LRT alignments. The front edge of the platform shall extend to within 3 inches of the threshold of the LRT Vehicle doors to comply with ADAAG.

The following minimum platform design criteria shall be used unless otherwise approved by UTA:

Table 8-3: LRT Platforms Criteria

1.	Platform ultimate length (excluding pedestrian access landing) (parallel to track)	355 feet
2.	Platform height (above top of rail)	8 inches
3.	Platform width	14'-0" (side platform) 17'-10 ½" (center platform – CBD) 16'-2 ½" (center platform – suburban)
4.	Distance from platform edge to rail track center	4'-6 ¾"
5.	Platform cross slope (drainage)	1–2% toward trackside

8.5 Streetcar Platforms

8.5.1 Configuration

In general, platforms shall be located in the sidewalk adjacent to the travel path. Disabled persons will be able to board the streetcar through the use of low-floor vehicles and raised sidewalks, if necessary. The platform length available for boarding and alighting shall be suitable for a one-car train.

All fencing shall be 42-inch height, black vinyl-coated chain link, with 1-inch openings. Fencing shall be installed in curbing or in a concrete strip for increased weed control. Fencing shall be grounded along the ROW for Streetcar alignments.

If a center platform is warranted, the design shall consider location, configuration, current ADAAG accessibility guidelines, and clear space around station amenities. The front edge of the platform shall extend to within 3 inches of the threshold of the streetcar doors to comply with ADAAG.

The following minimum platform design criteria shall be used unless otherwise approved by UTA:

Table 8-4: Streetcar Platforms Criteria

1.	Platform ultimate length (excluding pedestrian access landing) (parallel to track)	77 feet
2.	Platform height (above top of rail)	8 inches
3.	Platform width	8'-6" (side platform) 13'-10 ½" (center platform)
4.	Distance from platform edge to rail track center	4'-6 ¾"
5.	Platform cross slope (drainage)	1–2% toward trackside

8.6 General Station Requirements

This section pertains to all modes, unless otherwise noted.

8.6.1 Platform Surface

All platform surfaes shall have drainage cross slope to the trackside of 1-2% for all modes. The surface of all platforms shall be concrete, non-skid, and long-wearing weather-resistant. The detectable warning/tactile tile near the platform edge shall be yellow, high-strength plastic tiles of 4 feet in length. For CRT platforms, tactile tiles shall be placed along the entire edge of the boarding area to provide continuous warning to sight-impaired patrons. For LRT and Streetcar platforms, tiles shall be designed to accept the bridge plate of a light rail low-floor vehicle and placed 4-3/4" from the face of the platform edge. This strip shall meet ADA requirements, currently 24 inches wide, extending the full length of the platform drop-off area with no domes in the center 6 inches to allow the bridge plat to rest to allow boarding per ADA threshold limits. Tactile and/or physical separation is required along ramps and platform approaches. The warning strip shall not impede the passage of a wheelchair but shall be sufficiently rough or different to be felt by sight-impaired patrons.

8.6.2 Fare Vending Equipment

Fare-vending equipment will be installed at all stations. The equipment shall be located near main entry points or centered on the platform to minimize the length of travel for patrons. For detailed information on Fare Vending,

refer to Chapter 14 'Communications', Section 8.6.13.5 for conduit requirements, and Chapter 15 'Fare Collection Equipment'.

8.6.3 Amenities and Provisions

Elements associated with platforms may be provided by UTA or an outside establishment.

- Seating–Benches shall be provided at one or more locations on the platform and shall accommodate a number of seats appropriate for the size of the platform. Seating shall not allow lying down.
- Bicycle Storage–Space for bicycle racks shall be provided at stations, outside of platform areas.
- Trash Receptacles–Shall be provided at all stations and integrated into the "installation." Trash receptacles shall be sensitive to Homeland Security Safety Standards.
- Passenger Communications–Each station shall include remotely controlled variable message signs to display passenger information including next bus/train times.
- 120 Vac Receptacles–Will be provided for UTA maintenance and shall be in a NEMA approved locked box.
- Emergency Communication Device (Call box) –Linked to the dispatch center for the UTA Transit Police.

8.6.4 Signing and Communications

The basic objectives of the system signing are to guide persons to and through the system in the most efficient, safe, and user-friendly manner using a simple, strong, and precise style, organized in systematic and sensible layouts. Sign communication shall be further enhanced by proper placement of signs and careful determination of sign dimensions and quantities.

Signs shall be standard throughout the BRT system. Each station will have a system map and schedule. The signing is to emphasize the BRT system identity and be consistent with existing UTA signage. They shall be designed according to ADA standards.

This section contains general guidelines for the planning and design of signage and graphic displays in commuter rail and transit stations. Signage includes directional signage, safety and regulatory signage, informational signage and graphics, and variable message signs (VMS). Signage shall comply with ADA requirements.

Signs shall be standard throughout the LRTand Streetcar system. Each station shall have a system map and system schedule displayed in a map case. The map case shall be of sufficient size to accommodate power and communications conduit coming into the case through the base or legs of the case. If betterments to the station require kiosks or other display systems, they should also be of sufficient size to accommodate power and

electrical conduit coming into them through the base or legs of the display system. All signage shall be ADA compliant. Refer to section 8.3.7 for details on conduit requirements.

Electronic passenger information signs shall be standard throughout the CRT, LRT, and Streetcar system. The CRT and LRT platforms shall have a minimum of one electronic passenger information sign mounted on each canopy to show predictive/actual departure times for trains departing the platform from the trackside where the sign is mounted. The standard Streetcar canopy shall have one electronic passenger sign mounted to the canopy to show the same information. These signs shall be connected to the UTA data network.

Procurement and installation of electronic passenger information signs will be coordinated with UTA Information Systems Technology Deployment.

Clear and easily understood signage provides numerous benefits to customers. Design objectives for signage include:

- Arrange signage so that it is easily visible.
- Utilize materials and construction practices that minimize maintenance requirements.
- Utilize materials and construction practices that minimize initial cost.
- Standardize materials and construction practices.
- Minimize the number of decisions a passenger must make to transfer between modes. At decision points, it is preferable to limit the number of choices to two.

A consistent style of lettering shall be used for all graphics in stations indicating regulation, direction, and orientation. Consider assigning color coding to signs and other graphics to differentiate the direction of travel.

Locate information signs at decision points for maximum visibility. Signs shall orient outbound passengers to the surrounding community with appropriate signage or display maps. Locate maps (local area and transit maps) in the immediate proximity of fare collection equipment and at points of intermodal transfer.

Advertising signage shall be segregated from informational signage and graphics. Avoid placing advertising at critical decision-making points. In boarding areas, locate advertising opposite departing and waiting passengers, in linear clusters, and with accent lighting.

8.6.4.1 Wayfinding Signage

Signs directing motorists to, or within, transit station areas shall be coordinated with appropriate local and national signage standards and should include standard international symbols wherever possible. Wayfinding signage directing customers to recreational and cultural interests shall be located off the platform so as not to interfere with on-platform signage requirements.

8.6.4.2 Platform Map Cases

Free-standing map cases shall be provided on the platforms. There shall be two map cases per platform on the CRT and three per platform on LRT platforms. These will provide system, station, and train destination identification. Exceptions to these quantities may be based on the design of the platforms. They shall also display system maps and timetables. At least two signs shall be provided on each platform.

Station name signs shall be located on top of each platform map case. They should include the full name of the station, with the station address below. The station sign shall be easily seen by onboard passengers, both sitting and standing.

8.6.4.3 Passenger Information Signs

Electronic passenger information signs shall be standard throughout the CRT system. Standard two-canopy platforms shall have a minimum of one electronic passenger information sign mounted on each canopy to show predictive departure times for CRT trains departing the platform from the trackside where the sign is mounted. These signs shall be connected to the UTA data network. Procurement and installation of electronic passenger information signs will be coordinated with UTA Information Systems Technology Deployment. Section 8.6.13.5 delineates the conduit requirement for passenger information sign locations.

8.6.4.4 Station Entrance Signs

Illuminated station name signs should be provided at major station entrances.

8.6.5 Public Address (PA) System

A public address system is required to be furnished and installed at all rail station platforms. (For details on incorporating the preferred Valcom PA system, see 650 S Station Advertisement Spec.)

8.6.6 Advertising

No advertising is allowed on any station platforms.

8.6.7 Railings

Railings shall be made of 304 stainless steel, with a one, two, or three rails design based on code requirements. Railing spacing shall conform to ADA requirements.

8.6.8 Maintenance Space and Procedures

All station maintenance must be able to occur during revenue hours with all amenities fully functional. Major pieces of maintenance and repair equipment will be moved to the station from a central facility where equipment, supplies, and materials are stored.

Two 120 Vac receptacles per canopy with locked covers will be provided on the platform, under the canopy, for use by UTA maintenance personnel.

Frost-proof hose bibs shall be provided on the platform for use by UTA maintenance personnel. The location and number of hose bibs shall be such that 100-foot-long hoses may be utilized to reach any location on the platform.

Where possible, maintenance vehicle pull-outs near stations will be provided for street-running transit systems.

8.6.9 Circulation Elements

The stations in the system are functional spaces for patron circulation, waiting, and access to the transit vehicle. Therefore, the stations shall be designed as efficient conduits to accommodate peak demands without undue delay.

8.6.9.1 Pedestrian Patterns

The criteria listed in this section are minimum guidelines relevant to pedestrian circulation and should not supplant the logic of a better functional solution, should it develop.

- Stations should be designed to accommodate anticipated pedestrian movements directly and safely. The direction of circulation elements shall be as obvious as possible to aid recognition.

- Queuing space is desirable ahead of every barrier and in front of ticket vending machine (TVM) installations.
- No obstructions shall be permitted within the main pedestrian flow. This area shall be defined as an ADA-compliant clear strip along the running way side of the platform.
- Shelter areas shall have sufficient transparency to give adequate visual surveillance of these spaces for user safety and to discourage vandalism.
- Pedestrian access from station platforms to local bus, kiss-and-ride, park-and-ride areas, surrounding pedestrian sidewalk, and other transit mode areas shall be clear and as simple as possible with no visible barriers.
- For rail transit modes, access to/from platforms require channelization, or a turn-back, on the approach. Pedestrians will not be allowed straight access to/from or across a platform. The path should direct pedestrians to look at possibly oncoming trains before accessing or exiting platforms.
- Limit at-grade pedestrian crossings of rail tracks to two locations. Locate the at-grade crossings at each end of the station outside of the length of the platform.

8.6.9.2 Elements of Vertical Circulation

All vertical circulation elements shall be designed in accordance with ADA requirements. Ramps shall be provided at all changes of grade and be available to any rider needing or wishing to utilize them. Grades within the station and pedestrian areas should not exceed 5%. Ideal grades for the facility are 1.5 to 3%.

8.6.9.2.1 Ramps and Mini High Blocks

Any part of an accessible route with a slope greater than 1:20 shall be considered a ramp. Generally, ramps will be used to travel from the platform and to transition small elevation differences, such as from the curb to the parking lot. The standard drawings of each local jurisdiction should be consulted. All ramps shall be accessible under the provisions of ADA and comply with the following requirements:

- The maximum allowable gradient for a ramp is 8%; flatter slopes are desirable, and the least possible slope shall be used for any ramp.
- The surface of ramps shall be slip-resistant.
- Ramps with a rise greater than 6 inches or a horizontal projection (run) greater than 72 inches shall have handrails on both sides. Handrails shall be designed in accordance with IBC, ADA, and other accessibility requirements.

- Handrails shall be continuous above non-skid surface of the ramp. Inside handrails on switchback ramps shall be continuous.
- Level landings (where required) shall be provided at intervals of 30 feet (horizontal projection) and wherever ramps change direction.
- Minimum ramp width between handrails is 48 inches.

Handrailing for the mini-high block access ramps shall be grounded separately from any other adjacent elements that may need to be grounded. Mini-high block platforms shall be covered by a roof, maintaining appropriate clearances, and have a windscreen on at least two adjacent sides. The minimum dimensions for the mini-high block ramps are shown in Figure 8-4.

Figure 8-4: High Block Minimum Dimensions

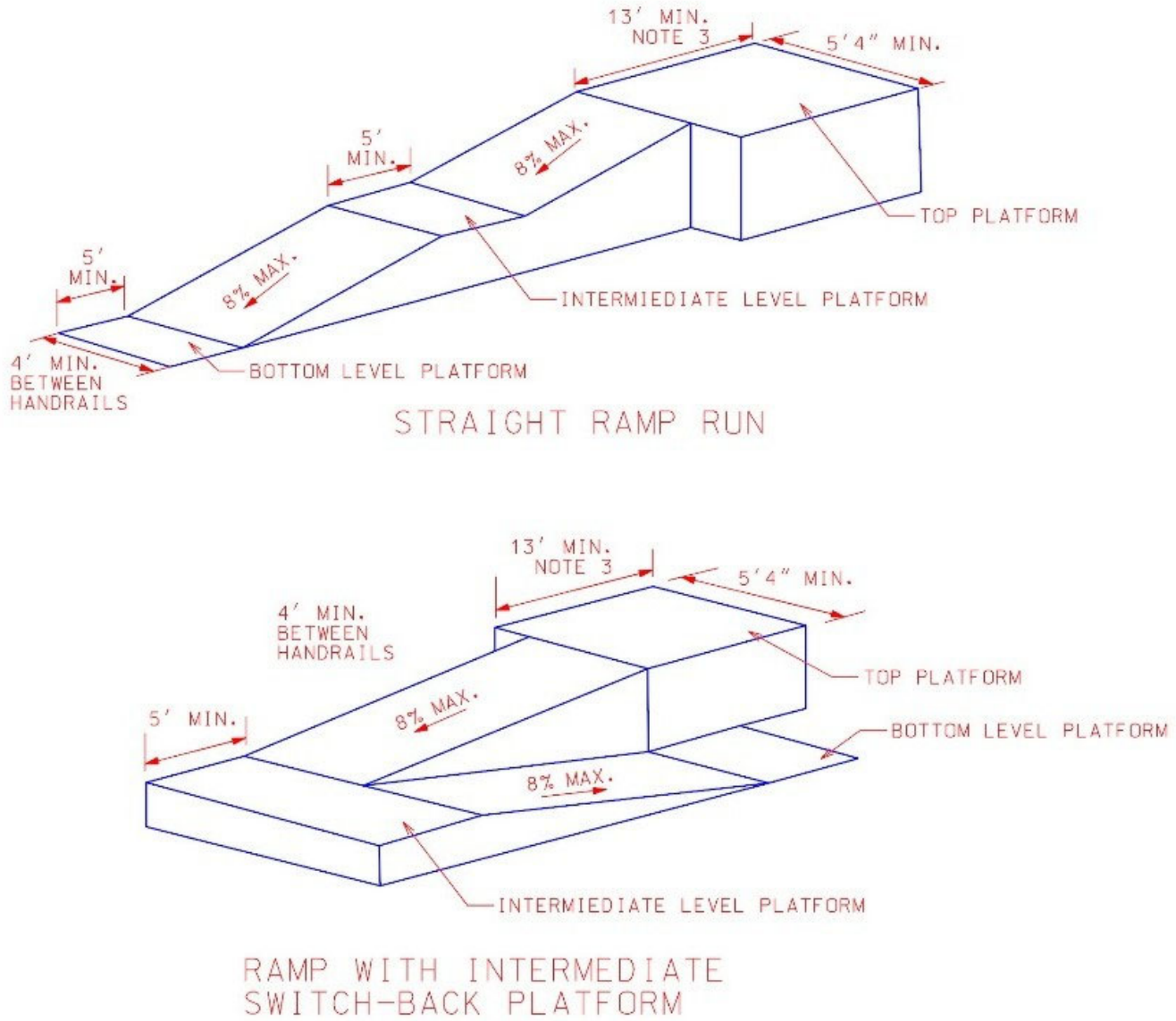

NOTES:
1. TOTAL HORIZONTAL DISTANCE OF RAMP WILL VARY.
2. ALL RAMPS MUST MEET REQUIREMENTS FOR CURRENT EDITION OF ADA.
3. OPENING SHALL BE 7'0" MIN.
4. DESIGNERS SHALL USE MAX. SLOPE OF 8%.

8.6.9.2.2 Stairs

The number, width, and location of stairs shall be in accordance with NFPA 130. The following shall be incorporated into the design of all public stairs:

- Minimum headroom clearance should be 9 feet measured vertically from stair tread nosing.
- Riser and tread dimensions shall be per the latest edition of the IBC.
- The minimum clear width of stairs for public use shall be 48 inches between handrails. Handrails may not project into the required clear width. The minimum length of landing for straight-line stairs shall be 54 inches. Larger dimensions shall be provided where planning indicates that more space is needed.
- Maximum height between landings shall be 12 feet.
- Treads shall have a non-slip surface.
- Open risers are not permitted.
- Detectable warning cues located on stair treads for the visually impaired shall be provided per the latest edition of the IBC.

8.6.9.2.3 Escalators and Elevators

Escalators are discouraged and are allowed only where there is large pedestrian flow and a significant vertical separation where several flights of stairs would otherwise be required. Elevators are required at all station locations where at-grade ADA access to the platform is not available. Stairway-only access is not allowed. The use of elevators shall comply with the following requirements:

- Meet current International Building Code and code requirements for state and local jurisdictions.
- Dual elevators are required for redundancy.
- Elevators should be large enough to carry an emergency stretcher.

8.6.10 Lighting

The lighting criteria contained herein are intended to provide the functional and aesthetic guidelines necessary for designing lighting for site areas and stations. Conformance with these criteria will ensure adequate lighting levels for the system facilities, and provide intended maintenance quality, convenience, safety, and efficiency.

8.6.10.1 Design Objectives

General objectives for station lighting are as follows:

- Promote safety by identifying and properly illuminating areas and elements of potential hazard.
- Enhance the system's visual and functional clarity by differentiating between site circulation networks, station entrances, fare vending areas, and platforms.
- Reinforce the presentation of graphic messages.
- Set minimum light levels.
- Coordinate with local standards.

8.6.10.2 Performance Standards

The following are key performance standards for lighting:

- Illumination Engineering Society Lighting Handbook
- Underwriters' Laboratories, Inc.
- National Electrical Safety Code

8.6.10.3 Standard Elements

All luminaries and lamp types shall be LED and standardized system-wide to provide design and perceptual unity and simplify maintenance requirements.

The UTA standard light is the Architectural Arm-Mounted Full Cutoff Area Light with a single head or double head at 180 degrees. Changes will be made to accommodate illumination requirements, as required by applicable code. Any other changes or beautifications to lighting are considered betterments and shall be funded by the requesting entity. Canopy lighting may be required to meet illumination level requirements.

8.6.10.4 LED Lighting Requirements

- LED light fixtures shall be warranted for a minimum of 5 years.
- LED light fixtures shall be compatible with the available power supply onsite. Every fixture shall include surge suppression.
- Fixture's lighting efficiency shall meet the most current industry-accepted standard. The lighting efficiency shall not be achieved by overdriving the LEDs.
- The LEDs in the fixture shall be of the same color temperature. LEDs with Color Rendering Index (CRI) below 75 are not acceptable for indoor lighting.
- Color temperature of LED light fixtures shall be 5,000 Kelvin and uniform throughout the area.

- Fixtures shall be provided with a lighting facts label. Outdoor fixtures shall have an IP65 general-use rating. For locations subject to high-pressure washing (tunnels, platforms, or parking structures), the fixtures shall have an IP66 rating.
- The lighting design shall ensure that the specified minimum lighting levels are maintained for a minimum of 15 years.
- The fixture shall meet LM 79 rating, and the chips shall meet LM 80 rating. An LED B50 and L70 lifetime graph shall be provided.
- Lighting under platform canopies shall be waterproof LED lights.

8.6.10.5 Illumination Levels

Illumination levels shall define and differentiate between task areas, decision and transition points, and areas of potential hazard. In addition to quantity of light, it is essential that illumination be designed to minimize glare and provide uniform distribution. Luminaries shall be selected, located, and/or aimed to accomplish their primary purpose while producing a minimum of objectionable glare and/or interference with task accuracy, vehicular traffic, and neighboring areas. Light design shall comply with any jurisdictional requirements for light trespass and light pollution.

See tables below for required illumination levels.

Table 8-5: Illumination Levels

Station Element	Recommended Average Minimum Maintained Illumination at Ground Levels (fc)
Open platform	5
Platform under shelter	15
Below grade platform concourse (if provided)	20
Stairs and escalators (if provided)	25
Fare vending kiosks or machines	30
Electrical, mechanical, and equipment rooms	20
Regular Service Bus boarding platforms	5
Kiss-and-ride areas	5
Park-and-ride areas	2
Washrooms and other enclosed public spaces	30
Pedestrian walkways	3
Entrance and exit roads	3

Table 8-6: Security Site Lighting Levels

Station Element	Minimum Illumination Levels (fc)
Public station areas (platforms, park and rides, concourses, passageways, etc.)	1
Service and utility rooms, washrooms	0.5
Electrical service rooms	1
Stairs, escalators	1 – 2
Fare vending kiosks or machines	5

8.6.10.6 Station Site Lighting

Station lighting includes internal site circulation and access to the station. The placement of luminaries shall not obstruct the movement of vehicles. Luminaire placement shall be coordinated with the planting and site plan to protect light standards located adjacent to roadways and to ensure that plantings will not obscure the lighting distribution pattern.

8.6.10.7 Vehicular Access Lighting

Vehicular access lighting shall provide a natural lead-in to the bus area and kiss-and-ride areas. The illumination on all access and egress roads shall be graduated up or down to the illumination level of the adjacent street or highway.

8.6.10.8 Pedestrian Access Lighting

Pedestrian access lighting shall define pedestrian walkways, crosswalks, ramps, stairs, and bridges. Special attention shall be given to lighting at entrance gates and pathways to the station, park-and-ride areas, and platforms.

8.6.10.9 Platform Lighting

Platform area lighting shall be in waiting and loading areas. The lighting elements shall extend the entire length of the platform and shall demarcate the platform, emphasizing the platform edge and vertical vehicle surfaces. Care shall be taken to avoid “blinding” operators or other vehicle drivers with excessive or misdirected lighting.

8.6.10.10 Control of Lighting Systems

Lighting control shall be designed to use energy efficiently. Automatic and manual control arrangements shall ensure efficient utilization of energy and maintenance procedures. All exterior site areas shall be illuminated where the ambient daylight drops below 30 footcandles. All but security site lighting is turned off ½ hour after revenue service stops. All operation lighting shall be turned on ½ hour prior to revenue service. Battery back-up for emergency lighting shall be considered in security-sensitive areas, such as tunnels, pedestrian bridges, and bridges. Provision shall be made for photocell with time clock or manual override. All station lighting shall be connected to UTA's communications network for remote lighting control. Ancillary areas shall be individually switched.

8.6.10.11 Standard Elements

Pole foundations shall extend approximately 24 inches above parking lot grade to reduce pole damage. However, pole locations within the lot area shall be selected to allow future re-configuration of stall and aisle layouts to accommodate different vehicle size. Wherever possible, pole locations should be placed in landscape islands with curbing to provide extra protection from vehicle damage.

Artificial light sources used to achieve the required footcandle levels shall be no higher than 15 feet in stations and 30 feet in parking lots. The size of light fixtures, pole height, and number of poles shall be selected to optimize both footcandle distribution and aesthetic design criteria. Design consideration should also be given to placing lighting on separate circuits in order to phase lighting levels and enhance reliability.

8.6.11 Other Station Considerations

8.6.11.1 Security Infrastructure

For system safety and security information, including guidelines on security cameras in parking lots, see Chapter 14.

8.6.11.2 Snow Removal

An approved snow melt system may be installed on new platforms and station areas. The design of the snow melt system will consider economics and reliability of existing systems.

A heat trace wire shall be installed on new canopies to prevent water from freezing in gutters and downspouts. Consider snow melt opportunities for crossover sections.

8.6.11.3 Operator Relief Rooms

At terminus stations and others where needed, operator relief rooms shall be incorporated into the station site design. The details of relief rooms requirements shall be coordinated with UTA during preliminary design.

These rooms shall be located near the platform to be easily reached from the transit vehicle and accessible with a key or keypad. Motion sensor lights shall be considered in the design of these facilities to reduce operational costs. Provide HVAC system to maintain an internal temperature of 55°F minimum and 75°F maximum.

8.6.11.4 Water Connections

Provide lockable water connections or hose bibs so any location on the platform can be reached by a 100-foot-long hose. Consider water connection applications for winter use.

8.6.11.5 Communications and Power Conduits

Each center platform will contain conduits for UTA communications on one side and conduits for power and additional conduits for snow melt sensor wire on the other side. The number of conduits, design, and size (2-inch minimum) shall be determined by the needs of the platforms. Include a minimum of two 2-inch spare conduits with tracer wire. These conduits will run from the power control cabinet (PCC) along the entire length of the platform, terminating in a pull box located just off the end of the platform, or at the base of a light pole at or near the end of the platform, on each end of the run. The PCC should be located off the platform. On side platforms, the communications conduits will be located on the inside (trackside) of the platform, and the power/sensor conduits will be on the outside. Conduits in the platform area will be concrete encased. Pull boxes should be located outside of primary walk paths.

Lateral 2-inch conduits will be provided from appropriately placed pull boxes for both communications and power conduits to each of the following locations: Ticket vending machines, card readers, canopies (for lights, public address, and passenger information signs), stand-alone message signs, light poles, kiosks, and map cases.

Each bus cutout or pullout shall contain one 1 ½-inch and one 2-inch conduit, plus spares, for UTA communications and electrical. These conduits shall be swept up and stubbed or connected underneath where the bench of a bus shelter will be placed, and to the base of the bus stop sign. Two conduit lines will be extended

from the ticket vending machines to a nearby location where a digital directional and wayfinding sign can be mounted. The conduit lines shall terminate at the PCC, which serves as the source for power and communications.

Clearly labeled and accurate As-Built drawings shall be provided showing the paths of required conduits, locations of hand holes, and designated locations of ticket vending machines, card readers, passenger information signs, IP security cameras, stand-alone message signs, light poles, camera poles, kiosks, and map cases.

Several devices on the station platform (TVM, Card Reader, etc.) communicate with servers at UTA headquarters. To accommodate this communication, a corridor-long conduit duct bank and fiber optic cable interconnects all BRT station PCCs with UTA headquarters. Refer to Chapter 14 Communications.

8.6.11.6 Power Control Cabinets

Each station will have a Power Control Cabinet (PCC) sufficient to meet the current and projected future needs of IT for the Fiber Optic Communications system and related hardware. These needs shall be minimally met as follows:

- All power-controlled cabinets shall be connected to an Alerton control system.
- The technology section of the PCC shall be located as far as is practicable from the high voltage sections of the PCC.
- Include a technology section in the PCC that can accommodate a data rack and confirm dimensions with UTA IT.
- The data rack shall swing open from either side to allow installation and maintenance of network equipment.
- There shall be a minimum of 30 inches of open storage space beneath the data rack for storage of slack loops of low voltage copper and fiber optic cable.
- There shall be at least one 4x4 quad electrical outlet installed with isolated grounds for data applications.
- Computer-controlled sprinkler systems, Art in Transportation projects, or other non-standard equipment, will not infringe on the defined space for the Fiber Optic Communications system and related hardware. Space for such projects will be in addition to this defined space in the PCC.

8.6.11.7 Emergency Exiting

Provisions shall be made to accommodate exit requirements from a transit station under emergency conditions, which could include evacuation of a train entering the station, crisis conditions in the station such as fire or bomb threat, or other situations. These emergency exit provisions shall apply to:

- Center platform stations which require patrons to exit at the platform ends if trains are occupying the station tracks.
- Side platform stations where a train in the station forces patrons on the platform adjacent to the Union Pacific (UP) mainline railroad to exit at the platform ends.
- Stations relying on grade-separated pedestrian concourses to access platforms.

Emergency exiting provisions shall meet the requirements of NFPA 130 and be developed in collaboration with local and UTA emergency response personnel.

8.6.12 Crime Prevention and Vandal Resistance

The criteria in this section relate to two aspects of crime: the prevention of crimes against passengers, and crimes against UTA property, the most common of which is vandalism. Both can be significantly reduced by thoughtful planning and design of facilities and through careful selection of building materials and products.

An approach to facility planning and design shall be used that incorporates crime prevention through environmental design (CPTED) principles, which seek to reduce the incidence and severity of criminal behavior by creating a built environment that deters crime. The central principle of CPTED is natural surveillance or planning a facility such that its legitimate users (i.e., passengers and staff) can easily observe all areas of the facility, while these users are seen by potential criminals as being clearly in control.

Possible CPTED strategies for stations include:

- Area identity–The zone around a station shall be clearly designated for the purpose of passengers boarding or alighting from trains and other transit modes and using other legitimate secondary transit facilities.
- Boundary Demarcation–Signs shall clearly demarcate the boundaries of the designated “transit use” zone around the station. The zone can be further demarcated by clearly defined use of paving materials, finishes, structures, site furnishings, lighting, or landscape plantings.

- Lighting–Stations shall be well-lit at night, both for the protection of passengers and effective surveillance by public safety and law enforcement personnel.
- Natural Surveillance–Place stations in direct view of residences or businesses that are occupied or staffed during operating hours allows constant, natural surveillance of station activities.
- Clear Lines of Sight–The design and placement of vertical structures such as walls, screens, and shelters shall incorporate clear lines of sight into the station by public safety and law enforcement personnel. Natural surveillance is enhanced by the use of transparent materials (e.g., glass and glass block) or screen-like materials (e.g., expanded metal mesh and wire grids).

8.6.12.1 IP Security Cameras in Parking Lots and Platforms

For security camera requirements in park-and-ride lots and platforms, see Chapter 14.

8.6.12.2 Emergency Communication Devices (Call Box) and Panic Button Lights

Four 1½-inch conduits (power, comms, spare) with appropriately spaced pull boxes and pull-strings will be placed to at least two locations within the parking lot for potential emergency communication devices and/or panic button boxes. The conduit will terminate in the communications section of the PCC. The equipment to be placed will be determined in coordination with UTA Transit Police and Information Systems Technology Deployment personnel.

8.6.13 General Materials and Finishes Guidelines

The following basic requirements and criteria have been established for the finish of public areas within the system. While convenience, comfort, and attractiveness shall be considered in the selection and application of these finishes, safety, durability, and economy are essential attributes.

8.6.13.1 Safety

- Flammability and smoke generation hazard from fire shall be reduced by using finish materials with minimum burning rates, smoke generation, and toxicity characteristics consistent with Code requirements as noted in IBC and NFPA 101, Life Safety Code, 1988 (or most current edition).
- Hazard from dislodgment due to temperature change, vibration, wind, seismic forces, aging, or other causes, shall be reduced by using proper fasteners and adequate bond strength.

- Pedestrian safety shall be increased, and the presence of the disabled shall be recognized by using floor materials with non-slip qualities. Stairways, platform edge strips, ramps, and areas around equipment shall have high non-slip properties.
- Edging and flooring shall be electrically insulated. No grounded metallic surface shall be installed within 5 feet of the edge of the platform adjacent to trains.
- Electrical protection and conductors shall be sized in accordance with NFPA 70 (NEC).
- All current-carrying enclosures shall be effectively grounded.

8.6.13.2 Cleaning

Facilitate cleaning and reduce cleaning costs by the use of materials that do not soil or stain easily, which have surfaces that are easy to clean in a single operation using standard equipment and cleaning agents, and on which minor soiling is not apparent.

8.6.13.3 Repair or Replacement

To reduce inventory and maintenance costs, materials shall be used that can be easily repaired or replaced without undue cost or interference with the operation of the system. For example, hose bibs, electrical outlets, lighting fixtures and lamps, glass or plastic lights, etc., shall be standardized with commonly available sizes and finishes to ease inventory stocking or direct purchase.

8.6.13.4 Resistance to Vandalism

Materials and details that do not encourage vandalism and that are difficult to deface, damage, or remove shall be used. All surfaces exposed to the public shall be finished in such a manner that the results of casual vandalism can be readily removed with common maintenance techniques.

8.6.13.5 List of Finish Materials

This list shall apply to all areas of public use. The use of items listed as “acceptable” is subject to location and environmental considerations. All materials shall conform to the requirements of ADA.

8.6.13.6 Acceptable Paving Materials

- Non-slip or other textured-finish concrete
- Stamped-pattern concrete
- Bituminous paving (in carefully defined areas or where required for consistency with adjacent paving)

- Quarry tiles (non-slip)
- Paver brick (dense hard)
- Selected artificial stone materials
- Precast pavers
- Natural stone pavers

Other paving materials may be acceptable, subject to UTA and local jurisdictional approval. Platforms shall be cast-in-place concrete slabs comparable in finish to standard urban sidewalks. The surface of all platforms shall be non-skid and of long-wearing weather-resistant materials.

8.6.13.7 Unacceptable Paving Materials

- Synthetic resin surfacing
- Standard cement terrazzo
- Bituminous surfacing, except as noted above
- Marble
- Wood products

8.6.13.8 Acceptable Metallic Surfaces and Finishes

- Stainless steel (areas of high pedestrian use)
- Black wrought iron
- Unfinished galvanized steel (where there is no contact with pedestrian touch)
- Factory-applied hard-baked enamel
- Color anodized aluminum (where there is a low degree of pedestrian touch)

8.6.13.9 Unacceptable Metallic Surface Finishes

Jobsite-painted metals are unacceptable metallic surface finishes.

8.6.13.10 Acceptable Canopy Materials

- Steel with factory-finished baked enamel
- Safety glass
- Silicone or Teflon coated fiberglass (where out of reach of vandals)
- Painted enamel
- Anodized aluminum

8.6.13.11 Unacceptable Canopy Materials

- Ordinary glass
- Uncoated fabric
- Ordinary plastics
- Combustible materials

END OF CHAPTER 8.

DESIGN CRITERIA MANUAL

/ CHAPTER 9

LANDSCAPING

Table of Contents

CHAPTER 9 LANDSCAPING 1

9.1 General 1
9.2 Objectives (Goals) 1
9.3 Reference Codes and Landscape Standards 3
9.4 Landscaping Considerations and Criteria 4
9.4.1 Climate Control 4
9.4.2 Height Requirements 5
9.4.3 Movement Control 5
9.4.4 Grading and Drainage 5
9.4.5 Berming 5
9.4.6 Slope Stabilization 6
9.4.7 Retaining Walls 6
9.4.8 Planter Walls/Landscape Walls 6
9.4.9 Lighting and Signage Interface 6
9.4.10 Irrigation 7
9.5 Security/Safety Considerations 8
9.6 Site Specific Objectives 9
9.6.1 Station 9
9.6.2 Platform 9
9.6.3 Relationship of the Park-and-Ride Facility to the Platform 9
9.6.4 Parking Lot (Park-and-Ride) 10
9.6.5 Bus Drop-Off to the Platform 10
9.6.6 Kiss-and-Ride Relationship to the Platform 10
9.6.7 Railroad Right-of-Way 11
9.7 Recommended Plant List—Low Water Use 11
9.7.1 Trees 12
9.7.2 Vines and Ground Covers 13
9.7.3 Flowers and Forbs 14
9.7.4 Ornamental Grasses 14
9.8 Plant Materials 15
9.8.1 Canopy Trees 15
9.8.2 Understory/Decorative Trees 15
9.8.3 Conifers 15
9.8.4 Shrubs and Hedges 15
9.8.5 Vines and Ground Cover 16
9.9 Trees 16
9.9.1 Patterns 16
9.9.2 Size Guidelines 17
9.9.3 Tree Pits 17
9.9.4 Tree Grates 18
9.9.5 Tree Guards 18
9.9.6 Tree Root Barriers 18
9.9.7 Guying and Staking 18
9.9.8 Topsoil 18
9.9.9 Mulch 19

CHAPTER 9 LANDSCAPING

9.1 General

This section outlines objectives and design parameters for the landscaping of Bus Rapid Transit, light rail, commuter rail, streetcar, and other UTA facilities, including stations, park-and-ride lots, and kiss-and-ride areas. All designs shall align with the guidance stipulated in these criteria. In specific cases, exceptions may be necessary, and discussions or recommendations for deviations, which could potentially lead to enhanced design and cost reduction, are encouraged. However, any deviations from the guidelines documented in the design criteria manual require written approval from the UTA.

The design criteria detailed here set specific requirements for plant and material usage, providing a design "palette" that fosters development of low-maintenance landscapes while ensuring safety and aesthetic appeal.

While the design of each passenger station and UTA facility will be site-specific, the design shall fall within the parameters of the basic goals stated in these criteria. Exceptions may be warranted in certain cases, and UTA encourages the Designer to propose deviations that may lead to design improvement and reduction in capital and/or maintenance costs.

9.2 Objectives (Goals)

- Provide a landscape design that is responsive to, and compatible with, the intended UTA operations, station architecture, lighting, and the budget constraints related to construction and operations.
- Ensure a safe, secure, and comfortable environment throughout the transit system, particularly at the stations.
- Achieve landscape design that is compatible with local climatic conditions that conserves water and other resources. The long-term goal for the landscape design is sustainability without supplemental water. To achieve this, a temporary irrigation system should be installed for a period of two to three years, depending on conditions. After the landscape has been established, the irrigation system may be used periodically to mitigate extreme conditions.
    - Plants shall be drought-tolerant and either native or adapted species, providing color and textural interest to the transit environment, and promoting a pleasant, pedestrian-friendly facility.

  - Plants shall be grouped according to their water requirements, and the temporary irrigation system shall be zoned accordingly. The principle of a water conserving landscape shall be employed.
  - Mulch shall be provided in all shrubs and ground cover beds, as well as in other landscape areas not populated with lawn.
- Develop a pedestrian environment that projects quality and offers visual identification of UTA passenger stations and facilities. Design landscaping to mitigate adverse visual impacts where applicable and appropriate.
- Control access to the system by reinforcing designated pedestrian and vehicular circulation routes. Use ground cover in landscaped areas and on slopes to deter pedestrian activity in non-designated areas. Establish appropriate barriers and directional controls to aid pedestrians in making logical progress through the station, promoting safe movement.
- Create a station contextual setting that integrates into a specific neighborhood and compliment the established streetscape/surroundings. Where possible, highlight local historical and cultural information while conforming to all applicable codes and regulations.
- Standardize landscape architectural components to ensure system-wide continuity, while allowing individual stations and facilities to retain unique characteristics.
- Ensure compatibility of landscape architectural elements with the architecture of station graphics and lighting, to create a harmonious and unified transportation system.
- Provide landscaping that does not interfere with rail vehicles, automobiles, or pedestrian sightlines or obstruction within the right of way.
- Create a permanent landscape requiring minimal maintenance, causing no interference with UTA operations, and ensuring the safety of automobile traffic. Trees and shrubs that produce fruits or seeds capable of staining pavements or creating hazards, prickly or poisonous plants, and trees with shallow roots that could potentially damage pavements, shall not be used.
- Provide a landscape irrigation system that is low maintenance, automatic, vandal-resistant, and water-conserving. The system shall include freeze-protected hose bibs which can be used to clean pavement surfaces and plant materials.
- Establish visual identity through the consistent use of a few basic construction elements and plant materials, where required, while maintaining visual interest and compatibility with adjacent areas through the use of varying materials from site to site.
- Establish visual screening as required by the environmental process, using walls, fences, and plantings.
- Ensure that the design guidelines fit within the budget allocations for planting, irrigation, and hardscape at each facility.

- Utilize site elements, in terms of both vegetative materials and hardscape features, that are highly likely to survive. Specify indigenous/adaptable plants and local construction materials to attain this goal.
- Design landscaping with low maintenance requirements and plant materials that are non-toxic and non-hazardous.
- Define landscape spaces where art and site blend to create a sense of arrival, destination, and excitement for the user. These spaces shall guide the movement of patrons and vehicles, serving as public gathering places and creating a pleasant, safe, and inviting pedestrian experience.
- Protect, frame, and enhance existing views and vistas.
- Consider intersection sight distance and adhere to the guidelines set out in the AASHTO Roadside Design Guide.

9.3 Reference Codes and Landscape Standards

For streamlining construction details, the Designer shall produce standard landscape detail drawings and specifications for consistent use throughout the Project.

The Designer shall contact the local Forestry Organization to identify current policies and plans and understand recommended plant materials in local planning authority jurisdictions.

Landscape design shall adhere to the latest editions of the following codes and standards, as applicable:

- Recommended plant materials by UDOT and relevant agencies.
- Utah Water-Wise Plant Guidelines.
- Crime Prevention through Environmental Design (CPTED) Guidelines.
- American Joint Committee on Horticultural Nomenclature Standards (AJCHNS) - Standardized Plant Names.
- ANSI Z60.1 - Nursery Stock, adopted by the American Association of Nurserymen, Inc.
- ANSI Z133.1 - American National Standard for Arboricultural Operations - Pruning, Repairing, Maintaining, and Removing Trees, and Cutting Brush - Safety Requirements.
- Bailey, L. H. *Standard Cyclopedia of Horticulture*. Macmillan.
- Smith, Mary S. *Crime Prevention Through Environmental Design in Parking Facilities*. NIJ Research in Brief, U.S. Department of Justice, Office of Justice Programs, National Institute of Justice, 1996.
- The Secretary of the Interior's Standards for the Treatment of Historic Properties.
- Policies and plans set by local authorities having jurisdiction.

9.4 Landscaping Considerations and Criteria

Considerations for the selection of plant material shall include, but are not limited to:

- Initial cost
- Irrigation and maintenance costs
- Drought tolerance landscaping
- Mature height and spread
- Growth rate
- Seasonal form and color
- Hardiness
- Sun/shade preferences
- Seed/fruit formation
- Disease and pest resistance
- Soil and drainage conditions
- Tolerance to wind, pollutants, salt, and abuse
- Transplant tolerance
- Availability
- Relationship to existing planting materials
- Vegetation clear zones
- Native to the region
- Protect significant existing plant material to the greatest extent possible to preserve a sense of scale and history
- Potential for contributing to allergic reactions to patrons

Given these considerations, the following Landscape Design Criteria shall be used to ensure the cohesiveness of the final design:

9.4.1 Climate Control

Establish a beneficial microclimate by understanding sun and shade patterns, using diverse plant materials such as shrubs, trees, ground cover, and grass. Additionally, integrate landscape elements like walls and berms with plantings to reduce noise in areas with heavy traffic and manage both desirable and undesirable winds.

9.4.2 Height Requirements

For security and safety considerations, landscaping elements, excluding trees, shall not exceed 2 feet 6 inches in height. The only exception shall be for taller hedges, where neighborhood concerns require buffer/screening mitigation.

9.4.3 Movement Control

The design shall ensure patrons maintain unobstructed access to the transit system. Bus stop waiting areas and kiss-and-ride zones shall be designed to be pleasant and comfortable for short-term usage while prioritizing visibility for security and safety. Patrons should never feel trapped or unsafe. Deterring cyclists and skateboarders from creating hazardous conditions for pedestrian and vehicular traffic is essential. A clearly defined separator for pedestrians from bus and auto traffic shall be established wherever feasible. Specify the installation of physical barriers, such as bollards, fences, railings, and plants, where they are deemed necessary to separate and control movement.

9.4.4 Grading and Drainage

Landscape designs shall be developed in close collaboration with the Civil Designer. This partnership is essential to ensuring that all planting areas are specifically designed to facilitate positive drainage, directing water away from the base of shrubs and other sensitive landscape elements. Avoid creating areas with overly steep inclines that would promote erosion. Ensure a positive environmental impact by integrating water retention/detention areas seamlessly with other site elements. Blend the finish grading with adjacent land elevations.

Swales for surface drainage in lawn or plant areas, shall have a shallow dished cross-section with a uniform gradient (1% minimum to 6% maximum) to provide a drainage flow line that can be easily maintained and traversed.

Coordinate grading required for landscape design with overall site grading requirements.

9.4.5 Berming

Employ skillful grading to incorporate mounds and depressions where needed to guide pedestrian movements, modify wind and precipitation patterns, obscure any undesirable views, and reduce unwanted noise.

Berms designated for parking lot screening shall maintain a slope that does not exceed a 3:1 ratio.

9.4.6 Slope Stabilization

All slopes shall be stabilized to deter erosion, physical failure, and maintenance problems. Slopes designated for mowed turf, or aggregate mulches, shall not exceed a slope of 4:1 (horizontal to vertical). Slopes designated for non-mowed grasses, or ground covers, shall not exceed 2:1 (horizontal to vertical).

Specify the use of straw, with a mulch overspray tackifier, to stabilize all newly seeded areas with slopes of less than 4:1 (horizontal to vertical).

Specify the use of biodegradable erosion control blankets to stabilize seeded slopes as follows:

- Maximum slopes - use an erosion control blankets or mats with a minimum functional longevity of 36 months.
- Slopes that are to receive ground covers, or shrub masses, shall be mulched using an erosion control blanket with a minimum functional longevity of 24 months.

9.4.7 Retaining Walls

When determining the type of wall to employ, its potential urban design impact on the surrounding environment shall be a paramount consideration. The selection and design process shall evaluate aspects such as cost-effectiveness, scale, color, texture, and compatibility of materials in relation to transit facilities and adjacent neighborhoods.

9.4.8 Planter Walls/Landscape Walls

To promote visibility into the site, and serve the dual function as a seating wall, no planter shall exceed a 22-inch height. Exceptions apply for screening walls, especially adjacent to residential properties. Designed for user comfort, seating walls shall be 20 inches in width. Materials for planter walls shall be concrete.

9.4.9 Lighting and Signage Interface

Coordinate plant selection and location with lighting placement clearances and with the limits of the sign and luminary palette. To maintain an unobstructed view of lighting and signage, plant materials shall be chosen that will not necessitate excessive trimming.

9.4.10 Irrigation

The long-term goal of the landscape design is for the landscape to be sustainable with as little water as possible. Specify plants with low water requirements to minimize water usage. In areas that are not accessible to the public, such as rail corridors, the chosen plant materials should be self-sustaining without additional water after a two- to three-year establishment period. To cultivate this kind of landscape, deploy a temporary irrigation system for this establishment duration, with its length influenced by the prevailing conditions.

In station areas, park-and-ride lots and other areas readily accessible by the public, permanent automatic irrigation systems are required to ensure a long-term attractive landscape. Except where turf grass and other "lush" plant materials are required by the local municipality, specify plants with low water requirements to minimize water usage that will not require additional water after the two- to three-year establishment period.

Following the establishment of low water landscapes, the permanent automatic irrigation system may be used periodically to mitigate extreme drought conditions.

- Plants shall be drought-tolerant, native, and adapted species that provide color and textural interest to the transit environment and promote a pedestrian-friendly facility.
- Group plants according to their water requirements, and zone both temporary and permanent irrigation systems accordingly. Uphold the principle of water-conserving landscaping throughout the design.
- Provide mulch in all shrubs, ground cover beds, and other landscape areas not planted in lawn.

The landscape for all UTA stations and facilities shall be fully irrigated, ensuring 100% coverage. Carefully coordinate the location of components with minimal accessibility to the public. Where installing irrigation beneath paved surfaces, use a sleeve that's twice the diameter of the irrigation pipe. All UTA-owned and maintained facilities shall have an irrigation deduct meter and a backflow device, in line with local water district standards.

Provide a landscape irrigation system that is:

- Low-maintenance,
- Automatic,
- Vandal-resistant, and
- Water conserving.

At station areas, public plazas, and park-and-ride lots, where appropriate, provide yard hydrants equipped with quick coupler valves and outlet boxes for hose attachments, and/or freeze-protected hose bibs. These

installations can be used for general maintenance activities such as cleaning paved surfaces and irrigating plant materials, among other purposes. Coordinate the locations to permit site coverage with a 100-foot hose.

Where irrigation piping is located under concrete, asphalt, or other paved surfaces, PVC sleeving shall be installed at twice the diameter of the working pipe.

Specify that each irrigation system shall be equipped with a pressure vacuum breaker (PVB) – or other equipment mandated by local and state codes. Additionally, other necessary components include a moisture sensor, a rain "freeze" (mini-click) sensor, a central output module, and a field satellite controller unit. These shall be compatible for integration with the UTA's central computer control system.

Where feasible, specify equipment to match existing components in the UTA system. Controllers and other automated components shall be compatible with UTA's central control system. Unless current system components are determined to be defective or substandard, the irrigation heads, drip system components, and valves should match existing equipment. This approach aims to limit replacement inventory for UTA maintenance personnel.

9.5 Security/Safety Considerations

Crime prevention through environmental design (CPTED) serves as a guiding principle when considering the landscape of the facilities. It emphasizes the strategic design and effective use of a created environment to reduce crime and enhance the quality of life. The Designer shall incorporate CPTED strategies to significantly reduce the fear and risk of crime, while sidestepping the considerable costs associated with hiring security personnel.

A holistic approach is essential where situating plantings, raised planters, hardscape structures, and similar landscaping elements. Their arrangement shall inherently discourage loiterers, persons intending to hide behind such features, or spots conducive for hiding harmful objects like explosives.

Strategically positioned shrubs, especially those taller than the average eye level, shall offer unhindered visibility to security or police vehicles. For improved safety in pedestrian areas and paths, delineate paving design changes in texture, scale, and color.

Discourage pedestrians and motorists from crossing tracks at unauthorized points by clearly defined pavement edges and/or landscaping.

Intersection design shall be in accordance with the latest edition of AASHTO - A Policy on Geometric Design of Highways and Streets. Moreover, an analysis of intersection sight distance shall be completed to ensure site triangles are free from obstructions.

9.6 Site Specific Objectives

9.6.1 Station

A main objective is to set the station in a visual park-like atmosphere with low maintenance conditions. To the maximum extent possible, minimize grass areas, especially in proximity to the station platform. Grass areas shall only be specified where required by ordinance, for visual mitigation, or in areas so large that other materials would not be cost effective/practical.

9.6.2 Platform

The objective is to establish secure and visually appealing spaces for transit patrons. Despite being designed for heavy traffic flow, these people-oriented spaces serve as short-duration waiting areas. Linear landscape treatments shall not impede upon pedestrian circulation routes or waiting areas. Crime Prevention through Environmental Design principles shall be applied.

Avoid plants with large leaves, messy flowers, or fruit to minimize maintenance requirements. All plants shall be below 36 to 42 inches in mature height, and trees shall branch above 7 to 8 feet at time of installation to allow clear surveillance of the site and platform. Plants with thorns shall not be used on the platform.

9.6.3 Relationship of the Park-and-Ride Facility to the Platform

Design spaces to be pedestrian-friendly, prioritizing the comfort and safety of patrons waiting for transit vehicles and rides. Despite being designed for heavy traffic flow, these people-oriented spaces serve as short-duration waiting areas. Linear edge treatment of the park-and-ride side of the station will allow entry to the station along the entire length of the platform. The designer shall coordinate locations of fare vending equipment, and station entry with the Architectural Designer(s).

The specific design elements for the park-and-ride façade of the station are as follows:

1. Pedestrian Flow and Accessibility
    a. Directional Elements: Utilize the massing of trees and vertical elements to guide pedestrian flow.

   b. Accessibility: Ensure all design features maintain accessibility for disabled persons. Ground cover areas should be defined primarily by hardscape elements and be situated away from the passenger station platform.
2. Landscape Features
   a. Trees: Position trees within tree grates for shade, visual relief, and area definition.
   b. Planters: Opt for raised planters/walls for defining pedestrian spaces and as seating options in specific areas. To maximize plant survival, use raised planters over grade planters where site conditions allow.
   c. Earth Sculpturing: Incorporate walls, earth sculpturing, and level changes to boost visual appeal.
3. Artistic Integration
   a. Use landscaping elements as art opportunities seamlessly integrated into the station's design. This can include wall designs, seating structures, berms, tree grates, lighting, etc.

NOTE: None of the above elements shall block visibility into the passenger station or provide hiding areas.

9.6.4 Parking Lot (Park-and-Ride)

Landscaping features aim to break up the parking lot with landscape islands. These islands, containing shade trees, serve dual purposes: adding visual impact and aiding in directional flow for vehicles and pedestrians.

Preserve existing planting wherever possible, and where the plant material is judged appropriate.

9.6.5 Bus Drop-Off to the Platform

The landscape design shall be coordinated with the station design, including making appropriate provisions for the location of bus bays adjacent to the platform. Passengers connecting between services shall be provided direct, unobstructed routes. Softscape development shall be provided between ingress and egress points. Expected high traffic volumes will preclude the use of large planting areas. Specify utilizing tree grates, or regularly spaced planters. Formulate contingency planning of shortened space between bus drop-off and platform in situations where busses are only a few feet away from the platform.

9.6.6 Kiss-and-Ride Relationship to the Platform

Specify the use of islands with trees and plant materials to control traffic flow and to break up the expanse of concrete parking, but only where feasible.

9.6.7 Railroad Right-of-Way

Landscaping of the railroad right-of-way is to be minimal. Erosion-prone cut and fill areas shall be addressed with low-maintenance shrub masses, ground covers, or native grasses and forbs (wildflowers). Shrub masses and ground covers on slopes shall be mulched with biodegradable erosion control blankets. Take particular care during the development of the landscape design to avoid plantings adjacent to the tracks where they may contribute to fouling the ballast, clogging drainage systems, or could be destroyed by the periodic herbicide treatment by track maintenance personnel.

Right-of-way landscape treatment shall follow all design objectives and be safe, appear pleasant, orderly, and clean, with emphasis on minimal maintenance and costs consistent with those objectives. Maintain an adequate clear sight distance at all auto and pedestrian grade crossings per AASHTO requirements.

Low maintenance characteristics are of prime importance in selecting plant material, particularly where drought conditions prevail on high embankment slopes where no irrigation shall be provided. Planting design shall emphasize simplicity rather than complexity, using naturalistic tree groupings and mass plantings.

9.7 Recommended Plant List–Low Water Use

The plants contained in the following lists are either native or adapted species. These plants are known for their ability to flourish with minimal water. This should not be considered a comprehensive or exclusive list as there are other species and varieties which may also be appropriate. To ensure the plants establish well, they shall receive adequate moisture with regular irrigation during their two-year establishment period. Following the establishment period, supplemental watering can be gradually reduced until the plants are adapted. The irrigation system should remain intact for periodic watering during drought periods and to maintain the plants in a healthy condition with minimal water.

Many of the species listed below are available in several varieties, so it is essential to check their water needs carefully prior to specifying them. If there is an asterisk (*) next to a botanical name, it indicates a moderate to high tolerance to saline soil conditions.

9.7.1 Trees

Botanical Name	Common Name
Acer platanoides	Columnare Maple
Acer glabrum	Rocky Mountain Maple
Acer grandidentatum	Bigtooth Maple
Catalpa speciosa	Western Catalpa
Celtis occidentalis	Common Hackberry
Crataegus sp.	Hawthorns
Juniperus osteosperma	Utah Juniper
Juniperus scopulorum	Rocky Mountain Juniper
Juniperus sp.	Junipers
Gleditsia triacanthos enermis*	Thornless Honeylocust
Koelreuteria paniculata	Goldenrain Tree
Maackia Amureusis	Amur Maackia
Malus sp.	Crabapples
Parrotia Persica	Persian Ironwood
Robinia 'Idaho'*	Idaho Locust
	*Purple Robe Locust
	Black Locust

9.7.2 Vines and Ground Covers

Botanical Name	Common Name
Artemesia schmitiana	Silvermound
Cerastium tomentosa	Snow in Summer
Cotoneaster dameri	Rock Cotoneaster
Juniperus sp.*	Junipers
Lonicer japonica halliana	Hall's Honeysuckle
Mahonia repens	Creeping Mahonia
Parthenocissus quinquefolia	Virginia Creeper
Parthenocissus tricuspidata	Boston Ivy
Sedum sp.	Stonecrop
Thymus sp.	Thyme
Vinca minor	Dwarf Periwinkle
Lysimachia nummularia	Creeping Jenny

9.7.3 Flowers and Forbs

Botanical Name	Common Name
Achillea millefolium*	Yarrow
Coreopsis sp.	Coresopsis
Echninacea sp.	Coneflower
Eriogonum umbellatum	Sulfur Flower
Gaillardia aristata	Blanket Flower
Geranium viscossisimum	Wild Geranium
Hemerocallis sp. sissimum	Daylily
Iris sp.	Iris
Lavandula sp.	Lavender
Linaria nevadensis	Elfiin Delight Flax
Oenothera sp.	Primrose
Penstemon sp.*	Penstemon
Sphaeralcea grossulariefolia	Gooseberry Leaf
Globemallow	

9.7.4 Ornamental Grasses

Botanical Name	Common Name
Agropyron intermedium	Intermediate Wheatgrass
Agropyron sibericum	Siberian Wheatgrass
Agropyron trichophorum	Pubescent Wheatgrass
Bouteloua gracillis	Blue grama
Buchloe dactyloides	Buffalograss
Helictotrichon sempervirens	Blue Oat Grass
Festuca sp.	Fescue
Miscanthis sp.	Maidenhair Grass
Oryzopsis hymenoides*	Indian Rice Grass
Sporobulus airoides*	Alkali Sacaton
Stipa sp.*	Needlegrass

9.8 Plant Materials

Plantings shall strengthen the visual quality of facilities and integrate seamlessly with the environment, either by blending with existing surroundings and/or where appropriate, emphasizing the facilities as distinct features. Do not use trees or shrubs that produce staining fruits or seeds, are prickly or poisonous, or have shallow roots that can damage pavements.

Select plants resistant to pests and suited for their intended environment. In urban contexts, prioritize indigenous/adaptable species known for resilience and pollution tolerance. For park and ride lots and UTA facilities exceeding one acre, plant a minimum of four different tree species. Position trees to optimize summer shade and coordinate their placement with the site lighting plan, considering future tree growth patterns.

Planting materials classification includes the following:

9.8.1 Canopy Trees

Considered to be larger and structural in nature and shall be employed to accent entry or decision points. Examples of areas where pattern landscaping is desired are facility peripheries, along adjacent streets, along the outer station platform edge of side platform configurations, and on either side of the alignment for center platform configurations.

9.8.2 Understory/Decorative Trees

Tending to be smaller than canopy trees, these are appropriate as infill between canopy trees. Use special care in the arrangement of these trees as they have lower branches and may obstruct sight lines.

9.8.3 Conifers

Conifers can be considered for limited use at sites where unobstructed sight lines are not required, such as areas that require wind-breaks. However, because conifers restrict visibility, they shall not be used where traffic or security considerations require clear sight lines.

9.8.4 Shrubs and Hedges

Shrubs and hedges shall be relatively small in scale and shall be employed to control pedestrian circulation where unobstructed sight lines are required.

9.8.5 Vines and Ground Cover

Employ ground cover for erosion control, decoration, and for the ability to assist in the control of pedestrian circulation. In special areas, specify an evergreen groundcover around trees and provide a minimum of 6-inches prepared soil for groundcover. Selectively use vines to landscape and soften vertical surfaces.

9.9 Trees

9.9.1 Patterns

Landscaping shall incorporate a street tree pattern that either matches existing patterns or aligns with those established by the local governmental authority for the adjoining area. Prior to selecting a standard street tree design, obtain approval from the respective local jurisdiction. In the absence of an existing pattern, the design shall establish a structured and consistent layout, with canopy trees being the recommended choice.

Adjust the longitudinal spacing to accommodate subsurface utilities, vaults, and special conditions such as existing or proposed sidewalk canopies, awnings, and shelters.

Prioritize the retention of healthy, mature trees and valuable site features during construction if they enhance the design. Use tree-wells or retaining walls to protect tree roots and preserve site features where grading isn't feasible. The chosen construction techniques and site layout will determine which vegetation can be retained. Clearly mark elements to preserve in the Contract Documents. Replace any removed trees due to construction, in accordance with the landscape design for the specific site. To safeguard trees from construction equipment damage, detail the care of trees to be preserved within the construction Contract Documents.

Specify trees and plant materials that will not hinder pedestrian use of walks and platform surfaces or produce litter from leaf and sap. Select relatively clean, upright evergreen trees where possible. Small to medium sized native deciduous understory or flowering trees are preferred for selection where room within the alignment is limited.

A ratio of one shade tree for every ten cars is desirable in parking areas, not including trees situated along major pedestrian walkways and peripheral plantings. The ratio may be varied according to local conditions. Trees should be located at stall divisions, end islands, parking perimeters, and in strategically placed islands. Informally group trees within parking stalls to contrast with parking area regularity. Coordinate layout with considerations for snow removal and piling requirements, security camera placements, and lighting strategies.

For park-and-ride lots or major bus transfer facilities, position large trees (greater than 3-inch caliper) in areas selected as most effective. Prioritize placement around the perimeter and along the primary pedestrian walkways leading to the facility. The intent is to delineate and enhance these major access points and pathways. Group trees prominently at entrances to the passenger station to create a sense of arrival, but ensure the ground level remains unobstructed for clear visibility.

Where placing trees in paved areas, use tree grates for root aeration and watering.

Employ small (½-inch to 1-inch caliper) and medium-sized trees (1-inch to 3-inch caliper) to achieve a secondary subdivision of the site and to provide an intermediate scale between the structure, the large tree pattern, and the smallest elements. Strategically place smaller trees to highlight and guide crucial internal traffic routes.

9.9.2 Size Guidelines

For areas under utility lines, including anticipated OCS lines, choose trees with a mature height not exceeding 20 feet. Where planting within a 15-foot radius of utility lines, select trees with a mature height up to 45 feet. Small trees, 30 feet or less in mature height, shall be planted at least 8 to 10 feet from any UTA structure. Medium sized trees, 30 to 70 feet at maturity, shall be at least 20 feet from a structure. Large trees, greater than 70 feet, shall be planted a minimum of 30 feet from a structure.

Select and place trees to minimize the opportunity for leaves or limbs to fall or blow onto the track. Place trees a minimum of 25 feet from the centerline of the closes track, ensuring mature limbs will not overhang the track. This precaution facilitates the potential addition of overhead traction system for use with electrified vehicles/locomotives.

9.9.3 Tree Pits

The drainage requirements for tree pits vary based on the soil's percolation properties. Under paved areas where soil is likely compacted, supplemental structural soil or soil amendments may be required. Soil amendments or additional topsoil shall be added deep enough to support the expected water retention and/or infiltration. Testing of existing soil conditions shall be performed prior to installation of trees.

9.9.4 Tree Grates

Tree grates shall be manufactured from cast iron with a minimum area of 16 square feet, 24 square feet preferred. Design the tree grates to support the weight of one wheel of a service vehicle. Tree grates shall comply with ADA requirements.

9.9.5 Tree Guards

Steel tree guards are to be considered at locations where tree trunks are likely to receive abuse from service vehicles, snow removal equipment, or pedestrians.

9.9.6 Tree Root Barriers

Root barriers are to be considered where trees are located adjacent to pavement and curbs. Depth of root barrier may vary depending on site and application.

9.9.7 Guying and Staking

Where staking or guying trees is required, follow industry approved accepted methods. For non-pedestrian areas, stake trees with a caliper of less than 4 inches using lodge pole pine wood stakes that are 2 inches in diameter.

Evergreen trees may be guyed using tree anchors. Use caution in specifying guying to minimize potential tripping hazards in pedestrian zones.

9.9.8 Topsoil

Designer shall coordinate topsoil requirements with plant materials to be installed. The minimum depth of topsoil shall be 6 inches. To prevent uneven settlement, specify placing topsoil in a uniform thickness. Topsoil shall not be stripped, placed, or worked while frozen or excessively wet.

In cut areas set to be seeded, specify covering rocks, including shale, with a minimum of 12 inches of suitable subsoil below the topsoil section.

To provide a positive drainage off of the pavement, the finished, settled grade of topsoil shall accommodate the depth of mulch layer and shall be a minimum depth of 5 inches below the top of the abutting pavement.

9.9.9 Mulch

Mulch shall be provided in all planting areas. A minimum depth of 3 inches of mulch shall be provided.

For stations, parking lots, bus drop-offs, and restoration zones, use Medium Wood Chip Mulch. Medium Wood Chip Mulch shall be placed so that the finished surface of the mulch is 2 inches below the adjacent pavement.

Rock Mulch shall be native round river rock, 4 to 6 inches in diameter. It shall be used in station areas, commercial zones, and/or areas not suitable for sustainable plant growth, such as under guideways and bridges. Additionally, Rock Mulch shall be applied in areas that may discourage encampments.

END OF CHAPTER 9.

DESIGN CRITERIA MANUAL

/ CHAPTER 10

TRAFFIC CONTROL AND SIGNALS

Table of Contents

CHAPTER 10 TRAFFIC CONTROL AND SIGNALS 1

10.1 INTRODUCTION 1
10.1.1 Responsible Owner 1
10.2 APPLICABLE STANDARDS 2
10.3 AGENCY COORDINATION 3
10.3.1 Local Agency Requirements and Coordination 3
10.3.2 Coordination with Adjacent Railroads 3
10.4 GENERAL OPERATIONS 3
10.4.1 Mixed Flow Operations 3
10.4.2 Dedicated Running Way Operations 4
10.5 DESIGN GUIDELINES 4
10.5.1 Traffic Signal Items 4
10.5.2 Communications/Interconnect 5
10.5.3 TSP/Signal Timing & Coordination 6
10.5.4 BRT Detection 6
10.5.5 LRT Detection 8
10.5.6 Railroad Preemption 9
10.5.7 Queue Cutter Signals 10
10.5.8 Channelization 10
10.5.9 Turns Crossing the Tracks at Signalized Intersections 11
10.6 TRAFFIC SIGNAL HARDWARE AND SOFTWARE 11
10.7 SIGNS 12
10.8 PEDESTRIAN CONSIDERATIONS 12
10.8.1 General 12
10.8.2 Pedestrian Movements at and Near Stations 12
10.8.3 Crosswalks 13
10.8.4 Islands 13
10.9 GRADE CROSSING WARNING DEVICES 13
10.9.1 Public Highway-Rail Grade Crossings 13
10.9.2 Private Highway-Rail Grade Crossings 14
10.10 BRT PAVEMENT MARKINGS 14

CHAPTER 10 TRAFFIC CONTROL AND SIGNALS

10.1 Introduction

This section establishes basic criteria for designing traffic signal systems and Transit Signal Priority (TSP) at Commuter Rail Transit (CRT), Light Rail Transit (LRT), Streetcar, and Bus Rapid Transit (BRT) intersections, as well as signage and striping (pavement markings) related to these elements. It provides guidance for the following specific areas:

- Traffic Signal system
- TSP elements (including communications)
- Transit Vehicle detection and auto/pedestrian detection
- Traffic signal operation and programming
- Traffic Signal Preemption and Queue Cutter operations
- Materials specifications for all the above
- Roadway signage
- Pavement markings / Striping

The objectives of this chapter are:

- To communicate requirements for ensuring the safety of passengers, motorists, and the general public.
- To establish uniform policies and procedures for traffic functions.
- To ensure that UTA traffic control devices and policies relating to transit facilities are compatible with those of other agencies.

10.1.1 Responsible Owner

Traffic control devices located on or benefiting public roadway traffic shall be owned and maintained by the agency having jurisdiction. Traffic control devices on station, parking, or other sites owned by the Utah Transit Authority (UTA), or those existing solely for the benefit or operation of UTA's transit system, shall be owned and maintained by UTA. While UTA control devices may be located on poles or facilities owned by the highway agency, they remain the responsibility of UTA to maintain.

Replacement of traffic control devices and facilities (excluding highway-rail grade crossing equipment) owned or maintained by others shall be replacement-in-kind. New facilities to be maintained by others shall be designed in

conformance with the current standards of the agency having jurisdiction or these criteria if approved by such agency. These criteria and guidelines do not absolve the designer from responsibility for proper traffic control, nor do they supersede more stringent requirements of the Utah Manual on Uniform Traffic Control Devices (MUTCD). All traffic control devices shall conform to the requirements, principles, and concepts of this Manual.

10.2 Applicable Standards

The design and materials for the above elements are required to be in accordance with and subject to the following governing standards, in the following order of priority:

1. The Utah Manual of Uniform Traffic Control Devices (Utah MUTCD)
2. UTA Standard Drawings and Specifications
3. Utah Department of Transportation (UDOT) Standard Specifications and Drawings, latest versions (*Available online at www.udot.utah.gov*)
4. National Electrical Code (NEC), as applicable (latest editions)
5. UDOT Pedestrian Grade Crossing Manual

Other applicable standards to reference for design to include but not limited to:

- Local/owning jurisdiction's standards and policies.
- American Railway Engineering and Maintenance-of-Way Association (AREMA) Utah Manual of Uniform Traffic Control Devices (Utah MUTCD) and/or the National Electrical Code (NEC), as applicable (latest editions).
- Engineering Track Standards and signal guidelines of the Union Pacific Railroad (UPRR).
- UDOT BRT Manual of Instruction.
- UDOT Preemption Manual.

Signals, signs, and markings shall comply with the policies of the local jurisdictions where the system will be constructed and with the MUTCD.

At highway railroad at-grade crossings where UDOT's Chief Railroad Engineer has oversight responsibility, the design of signals, markings, signage, and general safety features of an at-grade crossing shall incorporate the recommendations and requirements from the surveillance report.

The latest available revisions of each standard listed above shall be used to determine compliance with applicable codes and ordinances. Materials and equipment used in each installation and/or modification of traffic signal

systems, signing, and paving markings shall conform to the latest specifications contained in the standards of the highway agency having jurisdiction at the location of the installation.

10.3 Agency Coordination

10.3.1 Local Agency Requirements and Coordination

All traffic control design and construction, including but not limited to signals, signs, and pavement markings, shall be coordinated and reviewed with the local authority having jurisdiction. UDOT has safety oversight authority for all highway-railroad grade crossings and shall approve the design of every highway-railroad grade crossing per Utah State Code and Administrative Rule R930-5.

10.3.2 Coordination with Adjacent Railroads

Design and construction of UTA transit facilities located adjacent to other railroad company's property, track, or facilities shall be closely coordinated with the adjoining railroad company.

10.4 General Operations

10.4.1 Mixed Flow Operations

The following general considerations are to govern system designs for mixed-flow operations where transit vehicles operate within general auto traffic lanes:

1. Transit vehicle speeds shall not be higher than auto speed limits on the same corridor.
2. The design for all transit movements and operations shall conform to the Utah MUTCD.
3. The design process for all elements (above) shall be coordinated and reviewed with the local owning agency for the corridor and/or intersection (City, County, or UDOT). All elements related to operation of the shared corridor and intersections require owning agency approval at both the conceptual and final design stages.
4. Traffic signal phasing and operation, both for the BRT and for all other modal users at the site, shall be developed in conjunction with the local owning agency and with the UTA System Integration team, who are ultimately responsible for implementing the final design. Input and approval from these parties are required at the conceptual and final design stages to ensure a workable product is produced.

10.4.2 Dedicated Running Way Operations

The following general considerations are to govern system designs for dedicated running ways or lanes along a mixed-use corridor:

1. The entirety of the running way shall be either delineated or physically separated from general traffic. Delineation treatments may include, at the discretion of the owning agency and UTA, thermoplastic striping or a textured pavement warning strip. Physical separation treatments are defined to include reinforced curbing that is 6 inches or greater in height.
2. Street Running Bar signals shall be provided at signalized intersections or crossings for use in controlling transit vehicles within the dedicated running way.
3. Where a traffic signal exists at a transit crossing, signal design, phasing, and operation shall be developed in conjunction with the local owning agency and with the UTA System Integration Team, as defined above. Input and approval from these parties are required at the conceptual and final design stages.
4. Transit vehicle detection is required for the running way at the stop bar for all signalized intersections or crossings.
5. Median islands shall be installed wherever possible to discourage vehicles from driving around the gates. Non-mountable curb is acceptable for these installations.
6. Where a traffic signal exists within 500 feet of a rail crossing, signal preemption (requires communication from the crossing house to the traffic signal) shall be evaluated in coordination with the local owning agency and the UTA System integration team.
7. Refer to Chapter 13 for further details on dedicated corridor crossings.

10.5 Design Guidelines

10.5.1 Traffic Signal Items

The following design criteria for traffic signal items apply to signalized intersections accommodating various modes of transit systems, including BRT, CRT, LRT, and Streetcar.

Where used, 2-indication bar signals shall be placed as close to the auto stop bar as possible. Utilization of the 'closest' catenary pole, where such may be up to 50 feet behind the stop bar, defeats the purpose of the near side Bar signal. If catenary poles cannot be placed to accommodate this requirement, auxiliary signal poles will be required to correctly locate the bar signal.

1. Where used, 2-indication Bar signals shall be placed redundantly – both near-side (at the stop bar) and far-side (at the opposing stop bar) are required for all signalized intersection crossings.
2. All auto detection – unless dictated otherwise by the local owning agency – shall be identical in type to the detection used by the Highway Agency at other locations (stop-bar radar detection, typical).
3. All pedestrian elements of the traffic signal – including access ramps on corners, walkway widths, pedestrian push button placements, etc. – shall comply with the Americans with Disabilities Act (ADA) and UDOT Pedestrian Grade Crossing Manual, latest revision.
4. Pedestrian crossing time and signal layout shall provide for safe crossing of the entire street. Pedestrian refuges or islands in the middle of the roadway (excepting center running way platforms) are an exception and will require discussion with and approval by both UTA and the owning agency for the facility.
5. At center running platforms, pedestrian push buttons and display heads shall be provided as part of the platform design to facilitate pedestrians leaving the platform and crossing the road.
6. At intersections where auto movements are parallel to a dedicated transit running way, turns across the running way (right or left) shall be controlled by a traffic signal. The mode of control shall be determined in coordination with the owning agency and the UTA System Integrator as one of two types; Protected-only or Flashing-Yellow-Arrow. Permissive turning movements across the transit way are not allowed at signalized crossings.

10.5.2 Communications/Interconnect

1. All traffic signals are required to have communication to the UDOT ATMS network for owning agency monitoring and control and to facilitate TSP operation.
2. Fiber optic cable is the required mode for all signal communications. Any other mode will require approval from the owning agency and the UTA System Integration team as an exception. Where necessary, conduit installation meeting UDOT standard drawings and specifications may be required to provide a path for fiber optic cables to the traffic signal cabinets.
3. All traffic signal cabinet equipment, communications elements (cable, radios, conduit, boxes, etc.), and tie-ins to existing ATMS elements (splicing, hub switches, etc.) shall be included as part of each project.
4. All traffic signal equipment and installation shall conform to the most current UDOT standard drawings and specifications, unless specifically overridden by project requirements.
5. The proposed communications design shall be reviewed with the UTA System Integration team and with the UDOT ITS Deployment manager for the area and UDOT Fiber Optic manager. This coordination should occur at both the conceptual and final design stages.

10.5.3 TSP/Signal Timing & Coordination

Each transit project presents unique opportunities and constraints in terms of the level of TSP or preemption allowed, based on providing a balanced level of service for all users. The designer is responsible for analyzing the existing and future operations at all crossings and shared corridors to recommend a TSP level that maintains an acceptable level of service for all users at each traffic signal. This analysis shall consider the following:

1. Analyze the anticipated transit person-trips and required vehicle frequency.
2. Analyze auto and pedestrian operations and progression, for both current and future volume levels, both with and without the presence of the transit mode.
3. Analyze a large 'impact area' as part of the modeling work, extending at least 2 blocks beyond the transit corridor in all directions.
4. Analyze scheduling constraints at meet points with existing transit services.
5. Coordinate modeling and analysis with the owning agency and UTA throughout the process to ensure assumptions and data points are realistic and reflect the needs and desires of these groups.
6. Produce a final *Traffic Control Strategy Report* for the project with recommendations. Specifically, this report shall define the details of transit vehicle operation and priority timing used within the modeling, demonstrating how it benefits the transit system (on-time performance, schedule adherence, etc.) and its impacts on the surrounding network and other modal users (LOS impacts, queuing, etc.). The purpose is to demonstrate that the proposed operation works with all modal users, ultimately receiving approval from the Highway Agency and UTA Operations. The priority timing details are necessary for the UTA System Integrator to use in developing traffic signal timing that matches the modeled operation.

Upon completion of the above analysis, the UTA System Integrator will design and implement the final TSP programming and operation in coordination with UTA and the owning agency at each location, based on the recommendations provided in the report.

Traffic signal timing (i.e., coordination) for both corridors and isolated signals will be designed and implemented by the UTA System Integrator, in coordination with the owning agency.

10.5.4 BRT Detection

BRT vehicle detection shall be provided at signalized intersections, based on the following guidelines:

- At all signalized intersections utilizing 2-indication Bar Signals for control, the following detection points within the BRT travel lane will be provided to the traffic signal:
    - Mid-Block or Advance Detection, approximately 1,500 feet upstream, if no upstream traffic signals exist within 2,500 feet.
    - Communications connection between the local traffic signal and the next signal upstream (if within 2,500 feet) for peer call operation.
    - Stop bar detection, a minimum 15-foot zone starting at the stop bar. (If a single-lane running way, this can be the same detection zone as the check-out detection in the opposite direction). Stop-bar detection shall be placed behind the near-side bar-signal (if used) such that a waiting transit vehicle can occupy the detection zone while still viewing the bar signal.
    - Check-Out detection, a minimum 15-foot zone within 25 feet of the stop bar. (If a single-lane running way, this can be the same detection zone as the stop bar detection in the opposite direction).

At station platforms that abut an intersection or crossing, the placement of detection shall consider the length of dwell that is anticipated at the station, so as to prevent locking up the crossing during abnormally long dwells. In general, these locations should alter the above guidelines as follows:

- Stop bar detection will consist of two detection points:
    - Dwell detection, to be placed 50 feet upstream from the anticipated stopping point of the transit vehicle, such that the transit vehicle will trigger it as they pull into the station and remain on it while stopped.
    - Passage detection, to be placed at the stop bar as defined above, such that the transit vehicle will not trigger the detection point until they move to leave the station platform and proceed along their route.

If using the UDOT Connected Vehicle radio technology (V2X), all the above – excepting the signal interconnect – may be accomplished using this system. In this instance, auto detection (usually non-intrusive radar) should simply be placed to provide redundant, local check-in and check-out detection points for the transit vehicle, but primary system operation will be via the V2X system.

If the BRT will operate in a normal auto lane (mixed-flow) and 2-indication Bar signals are to be used for BRT control in that lane, the UDOT V2X system is required to provide vehicle identification and detection.

The designer is encouraged to make recommendations regarding alternate or new detection technology, the use of countdown timers, vehicle-to-wayside applications, etc., for evaluation by UTA, with the understanding that such technologies and options shall be compatible with and approved by the Highway Agency owning the roadway.

The proposed detection layout for a project shall be reviewed with the UTA System Integrator, who is ultimately responsible for making it operate as desired, to ensure that the intended operation can be accomplished with the signal control hardware and software proposed. This coordination should take place at both the conceptual and final design stages.

10.5.5 LRT Detection

LRT vehicle detection shall be provided at LRT rail grade crossings or adjacent/impacted traffic signals, based on the following guidelines:

- At all crossings or intersections utilizing LRT Bar Signals for control, the following LRT track detection points will be provided to the traffic signal:
    - Mid-Block or Advance Detection, approximately 1,500 feet upstream, if no upstream traffic signals exist within 2,500 feet.
    - Communications connection between the local traffic signal and the next signal upstream (if within 2,500 feet) for peer call operation.
    - Check-In detection, approximately 60 feet upstream or 25 feet (minimum) upstream of the near side bar signal.
    - Check-Out detection, approximately 60 feet downstream or 25 feet (minimum) downstream of the near-side bar signal (for reverse running support).

At station platforms that abut an intersection or crossing, the placement of detection for the upstream direction shall consider the length of dwell anticipated at the station, so as to prevent locking up the crossing during abnormally long dwells. In general, these locations should modify the above guidelines as follows:

- Check-In detection will consist of two detection points:
    - Dwell detection, to be placed 50 feet upstream from the anticipated stopping point of the LRT vehicle.
    - Passage detection, to be placed 25 feet upstream of the near side bar signal, but ahead of the anticipated stopping point of the LRT vehicle.
- The above track detection points may be provided in either of two ways:

- Inductive loops, embedded within the concrete track (or atop the ballast and rail-ties).
- Stop bar Radar, installed to provide a 150 feet zonal coverage of all needed detection points for a given approach. This method is preferred by UTA Operations and requires coordination with the UTA System Integrator to ensure all potential detection points are accounted for. If placed correctly, a single sensor may be used for both auto detection and LRT detection for an entire approach.

If shared lanes are anticipated at an intersection, where the LRT track will run within an auto travel lane on approach to a traffic signal, the use of the UDOT Connected Vehicle radio technology (V2X) is required to facilitate vehicle identification and detection in the mixed flow environment. The existing AVI system in use by the legacy LRT systems is expired technology and should not be used. The designer is encouraged to make recommendations regarding alternate or new detection technology, the use of countdown timers for departing trains, train-to-wayside applications, etc., for evaluation by UTA.

The proposed detection layout for a project shall be reviewed with the UTA System Integrator, who is ultimately responsible for making it operate as desired, to ensure that the intended operation can be accomplished. This coordination should take place at both the conceptual and final design stages.

10.5.6 Railroad Preemption

Railroad preemption shall be required for any traffic signal systems at intersections located within 200 feet of a rail grade crossing. It should also be evaluated for traffic signals located between 200 and 500 feet from a grade crossing, adhering to the recommended practice of the Institute of Transportation Engineers (ITE). This requirement is primarily intended for high-speed crossings (40 mph or greater), but should be reviewed for all at-grade crossings, including Light Rail, on a site-specific basis.

For low-speed rail crossings (Light Rail), the Highway Agency that owns the roadway and/or signal should be consulted to determine the level of transit signal priority they will permit at each location. Traffic Signal Preemption, if allowed, offers the most efficient signal priority tool for transit vehicles and should be considered for implementation where approved by the owning agency.

At all high-speed rail crossings, a hardwired connection between the railroad and the traffic signal cabinet is mandatory. This connection utilizes a 7-conductor IMSA signal cable (14awg) to provide three specific circuits: 1) Advance Preemption Circuit, 2) Simultaneous Preemption Circuit, and 3) Gate Down Circuit. These circuits shall be

provided for either direction on either track, at any speed. They shall consistently deliver timely notifications to the signal cabinet, relative to the gate activation, irrespective of track or direction.

At low-speed rail crossings (Light Rail) where preemption is permitted by the Highway Agency, the Gate Down circuit is not necessary unless gates are in use.

Refer to the most current version of the *UDOT Preemption Manual* for guidance on application of this tool.

All proposed features shall be submitted to UTA for approval.

10.5.7 Queue Cutter Signals

At-grade rail crossings with a downstream traffic signal within 500 feet of the crossing shall be evaluated for potential vehicle queueing from the signal back to the crossing. If analysis demonstrates a potential for vehicle backups that could foul the track, the installation of a Queue Cutter signal at the grade crossing shall be considered.

Queue Cutter signals shall have downstream vehicle detection extending at least 150 feet past the rail crossing. Additionally, the use of Queue Cutter signals requires an agreement from the Highway Agency that owns the roadway.

Refer to the most current version of the *UDOT Preemption Manual* for guidance on application of this tool.

10.5.8 Channelization

Opposing traffic lanes on both highway approaches to the crossing shall be separated by either: medians bounded by non-traversable curbs or channelization devices. Non-traversable curbs are defined as a highway curb designed to discourage a motor vehicle from leaving the roadway. Such curb may be used where highway speeds do not exceed 40 miles per hour and shall be more than six inches but not more than nine inches high. If not equipped with reboundable reflectorized vertical markers, paint and reflective beads should be applied to the curb for night visibility. Design standards and specifications of the local governmental entity having jurisdiction over the roadway shall apply.

Where conditions permit, medians or channelization devices shall extend a minimum of 100 feet from the gate arm, unless otherwise approved by UTA. The gap between the lowered gate and the curb or channelization device

shall be one foot or less. This is measured horizontally across the road from the end of the lowered gate to the curb or channelization device, or to a point over the curb edge or channelization device.

10.5.9 Turns Crossing the Tracks at Signalized Intersections

Left turns crossing the tracks at signalized intersections shall only be allowed from exclusive turn lanes for traffic traveling parallel to the rail line. These left turns are permitted on a green arrow only. An R10-5L or R10-10L sign will be installed adjacent to the left-turn signal head for clear instructions.

Right turns crossing the tracks at signalized intersections shall be permitted only from exclusive right-turn lanes. These lanes shall have a separate right-turn signal and comply with appropriate MUTCD signage, such as R10-11a and R10-11b. The approach of a UTA vehicle should trigger the display of double red signal indications to prohibit right turns. Furthermore, right turns on red should be prohibited at these locations.

10.6 Traffic Signal Hardware and Software

Typically, traffic signal materials requirements are outlined in the *Traffic Signal Systems Specification* for each project. As new technologies and standards are adopted by various owning agencies, these materials will change over time. Generally, all electronic control devices (such as signal controllers, cabinets, detection equipment, V2X elements, and communications) used at traffic signals should be furnished by the owner. This is to allow materials to be provided through existing UDOT contracts, ensuring cost efficiency and consistency in equipment and quality.

If the owner cannot provide the required materials, all items furnished by the contractor shall adhere to all UDOT standard specifications. They shall also be identical to items used elsewhere by the Highway Agency and be approved for use through submittals to the UTA System Integration team. Please note that many elements used at traffic signals are proprietary – specific brands and models may be required to ensure interconnectivity between sites and/or with centralized control software.

Designers are encouraged to propose alternate technologies, equipment, models, and software systems if they believe these could offer benefits to the system over existing or accepted materials currently in use.

10.7 Signs

All street and overhead signage, including regulatory, warning, and guide signs, shall be designed and installed according to the standards of the Utah MUTCD and UDOT Standards, including UDOT Standard Drawings and Specifications. Wayfinding signage shall adhere to UTA standards and guidance for Wayfinding Signage (UTA Wayfinding and Signage Sign Schedule and Drawing Package) or as directed by UTA.

Custom non-standard signs, either in terms of appearance or placement, shall be coordinated with and approved by the local agency having jurisdiction over the roadway and UTA.

10.8 Pedestrian Considerations

10.8.1 General

The design shall consider pedestrian capacity and control. Pedestrian indications shall be provided at all crosswalks under traffic signal control and shall be coordinated with vehicular and train movements. Generally, pedestrian crossing time and signal configuration will facilitate the crossing of the entire street. However, if adequate pedestrian queuing is available in the median, crossing time may be adjusted to allow pedestrians to reach the median safely.

10.8.2 Pedestrian Movements at and Near Stations

Designs for passenger stations and pedestrian movements near these locations shall aim to minimize the requirement for pedestrians to cross railroad tracks. Where crossings are necessary, such as accessing center platforms between UTA tracks, pedestrians shall only use specifically designated grade crossings.

Crossing Union Pacific or other railroad tracks is permissible only at authorized public grade crossings. Warning devices shall be provided as indicated in Chapter 19.

Designs shall orient the walkway approach to the designated pedestrian/railroad crossing to maximize pedestrians' visibility of oncoming train traffic. Fencing and other suitable measures shall be implemented to discourage pedestrians from accessing the track except at the authorized crossing.

The design shall also aim to minimize the requirement for pedestrians to cross streets and significant traffic patterns in parking areas near stations. Where a pedestrian crossing is part of a signalized street intersection, control shall be provided by standard vehicle and/or pedestrian traffic signals. At other pedestrian crossing

locations, as justified by a site-specific engineering study, additional measures such as passive signs, active signs, flashing beacons, movable gates, or a combination thereof, may be required. Refer to Chapter 19 for additional information on pedestrian crossings.

10.8.3 Crosswalks

The minimum width for crosswalks, where crossing public streets or major driveways adjacent to public streets, shall be 10 feet.

10.8.4 Islands

Where necessary, pedestrian refuge islands positioned between traffic lanes shall have a minimum width of 6 feet, measured from the face of one curb to the face of the other. The size of these islands shall be determined through a capacity analysis, as outlined in the current edition of the Highway Capacity Manual. Pedestrian facilities shall maintain a minimum acceptable level of service of "C". The minimum usable length of the island shall be either the width of the crosswalk or 20 feet, whichever is greater. All pedestrian refuge islands at or on UTA's facilities shall be constructed with a raised barrier curb and appropriate disabled access, instead of merely using pavement markings.

10.9 Grade Crossing Warning Devices

Traffic control measures shall be implemented to ensure the safe and efficient operation of vehicular, pedestrian, and rail traffic at all highway-rail grade crossings. These measures shall typically include, but are not limited to: crossbucks, flashers, bells, automatic gates, signs, pavement markings, and channelization. This could include a blank-out sign with an audible bell for warning of an approaching train.

Supplemental traffic controls may include traffic signals, turn restrictions, and modifications to streets or driveways, where appropriate. The designer shall conduct an individual analysis for each grade crossing to determine specific traffic control and crossing protection needs and design these provisions accordingly.

10.9.1 Public Highway-Rail Grade Crossings

The following design elements shall be provided at public grade crossings:

- Crossbucks, electronic bells, flashing light signals, and automatic gates.

- Flashing light signals shall be mounted as required to provide maximum visibility, including cantilever mountings, etc., especially on multi-lane roadways or roadways with profile restrictions. Should their installation distract driver attention from nearby traffic signals, ground-mounted flashing light signals will be added to ensure adequate signal visibility.
- Crossing area illumination in conformance with the American National Standards Institute's
- "*Practice for Roadway Lighting*", RP-8, available from the Illuminating Engineering Society.
- Channelization provisions, as described previously in this chapter.
- Any other necessary and appropriate traffic control signs and markings, included in the Utah MUTCD, in accordance with AREMA guidelines and per the UDOT Chief Railroad Engineer.

10.9.2 Private Highway-Rail Grade Crossings

At minimum, crossbucks shall be provided where private crossings (driveways) intersect UTA trackage. Adequate sight distance shall be provided along the track in both directions. Standard flashing light signals or automatic crossing gates may be installed at UTA's discretion.

10.10 BRT Pavement Markings

All traffic markings shall conform to and be installed according to the governing specifications listed at the beginning of this document. If markings are to be non-standard, either in appearance or placement, their use shall be coordinated with and approved by the local owning agency and UTA.

All pavement markings shall comply with the requirements of the most recent revision of the ADA.

Busway signage, traffic control, and pavement markings for Type II and III BRT lanes shall comply with the guidelines described in Chapter 2G Preferential and Managed Lane Signs and Chapter 3D Markings for Preferential Lanes of the MUTCD.

At all busway entry points, signage shall indicate that entry onto the busway is restricted to authorized vehicles only. The pavement message "Bus Only" shall be displayed in the busway lanes at appropriately spaced intervals.

Consideration should be given to suitable directional and informational trailblazer signage to guide potential BRT patrons from controlled-access highways, arterial roads, and suburban streets to parking areas and drop-off zones.

END OF CHAPTER 10.

DESIGN CRITERIA MANUAL

/ CHAPTER 11

TRANSIT VEHICLES

Table of Contents

CHAPTER 11 TRANSIT VEHICLES 1

11.1 GENERAL DESCRIPTION BUS RAPID TRANSIT VEHICLE 1
11.1.1 Vehicle Configuration 1
11.1.2 Boarding and Alighting 2
11.1.3 Electrical Vehicle Supporting Infrastructure 3
11.1.4 Vehicle Finishes 3
11.2 COMMUTER RAIL VEHICLES 4
11.2.1 General Description 4
11.2.2 Locomotive 5
11.2.3 Commuter Passenger Vehicles 5
11.3 HIGH VOLTAGE SYSTEM 6
11.4 LIGHT RAIL VEHICLE 7
11.4.1 General Description 7
11.4.2 Weight Constraints and Design Loading 8
11.4.3 Light Rail Vehicle Dimensions 8
11.4.4 Vehicle Performance 9

CHAPTER 11 TRANSIT VEHICLES

11.1 General Description Bus Rapid Transit Vehicle

This section describes the basic attributes of the Bus Rapid Transit vehicles to be used by UTA. The UTA BRT fleet will include two vehicle sizes: a 60-foot articulated bus and a 40-foot standard bus. The selection of vehicle size will be based on the ridership demand of a particular corridor. The propulsion type of the vehicle will be selected based on a list of criteria determined by each project.

11.1.1 Vehicle Configuration

11.1.1.1 60-foot Articulated Bus

11.1.1.1.1 Dimensions

Refer to Table 11-1 for the typical dimensions of BRT vehicles. For the bus turning template, consult Chapter 5.

11.1.1.1.2 Doors

All 60-foot articulated buses in the BRT fleet shall accommodate both right-side and left-side boarding. The standard door configuration includes three right-side doors and two left-side doors.

11.1.1.2 Bicycle Storage

The seat layouts shall feature wider aisles for better circulation. Additionally, the 60-foot articulated buses will include interior bicycle boarding areas.

11.1.1.3 Wheelchair Securement and Access

ADA boarding shall be at center door for 60-foot vehicles. The center door shall be equipped with a bridge plate, operable by the bus driver. ADA passengers shall have a front and rear facing securement option to streamline boarding. The rear facing securement should be controllable by the passenger.

11.1.1.4 40-foot Standard Bus

11.1.1.5 Dimensions

Refer to Table 11-1 for the typical dimensions of vehicles. For the bus turning template, consult Chapter 5.

11.1.1.6 Doors

All 40-foot standard buses in the fleet shall have a minimum of two doors.

Table 11-1: Typical Vehicle Dimensions

	60-foot Articulated Bus	40-foot Standard Bus
Max. Height	140 inches	140 inches
Width	102 inches	102 inches
Length	59 to 65 feet	40 to 44 feet, 11 inches
Typical Step Height	14 inches	14 inches

11.1.1.7 Bicycle Storage

Bicycles shall be externally stored at the bus front, on a 3-position bike rack. The design of the platform's step height at the station shall take into consideration the safety of customers stepping down off the platform to access their bikes in the front bike rack.

11.1.1.8 Wheelchair Securement and Access

ADA boarding shall be at the front door for 40-foot vehicles. ADA passengers shall have a front and rear facing securement option to streamline boarding. The rear facing securement should be controllable by the passenger. A wheelchair-accessible ramp, located at the front door, shall be usable as a bridge plate at level boarding stations.

11.1.2 Boarding and Alighting

In areas with a Type II, Type III, or Type IV Running Way, all station platforms will be raised to facilitate level boarding. For station design specifics, please see Chapter 8. To ensure access for mobility-challenged patrons,

buses shall be equipped with at least one deployable bridge plate that will span the gap between the bus and the platform. Where the bridge plate is deployed for boarding and alighting, its slope shall not exceed a 6:1 ratio. The dimensions of the bridge plate shall be 35 inches in width and 20 inches in length.

In addition to the deployable bridge plate for loading at raised platforms, each bus shall have either a ramp or lift for boarding and alighting from the roadway surface. This enables accessibility for boarding and alighting in off-route areas. The ramp shall be deployable to the ground at a maximum 6:1 slope. In case of a 40-foot bus, the ramp shall function as the bridge plate for level boarding.

All ramps or lifts shall comply with the latest ADA requirements.

11.1.3 Electrical Vehicle Supporting Infrastructure

Charging infrastructure equipment shall be coordinated between construction design and the vehicle technical specifications. For example, depot charging equipment shall be compatible with bus charging ports and their locations. This includes dispenser and port locations and cord lengths. Some configurations may require multiple ports on the vehicle depending on parking layout and dispenser placement for depot charging. Depot charger connections should utilize SAE J1772 DC CCS type 1.

Design location of overhead on-route charger equipment shall be coordinated with the location of contact rails on the bus. On-route chargers should be placed strategically on the route to ensure the vehicles have enough time to charge, to provide sufficient range year-round. Service planning shall be included in the decision process. Overhead High-Power chargers should utilize SAE J3105, which includes specifications for where charge contact rails shall be mounted to the roof of the bus.

11.1.4 Vehicle Finishes

To differentiate the BRT system from the standard bus service, all BRT vehicles shall follow UTA's BRT branding scheme. This includes the color scheme of the vehicle exteriors as well as on board passenger amenities. Coordinate with the UTA Public Relations Department and Customer Experience Department for the most current branding design. The vehicles will also incorporate enhancements to improve the aesthetic design, such as larger windows for increased lighting and interior materials and finishes that suggest superior service.

11.2 Commuter Rail Vehicles

11.2.1 General Description

This section outlines the fundamental characteristics of the Commuter Rail Vehicles (CRV) Locomotives and Passenger Cars that UTA will utilize. These vehicles shall be fully compatible with existing vehicles to enable mixed consist operations. Information contained herein is intended to generally define the composite aspects of the vehicle which relate to the interfaces between the vehicle and other portions of the UTA Commuter Rail System. Additional details of the locomotives and respective passenger cars are detailed in the technical and commercial specifications of each individual procurement and selection documents.

The UTA commuter rail system (named Frontrunner) is designed to operate at a maximum safe speed of 95 mph, with a normal operating speed of 79 mph. Vehicles are designed to operate on a track gauge of 4 feet, 8½ inches. A train will be made up of a maximum of 8 cars. The vehicles are designed for an average annual operating distance of 70,000 miles.

Other applicable documents, published separately, for use in design include the current editions of:

- Vehicle Procurement Documents
- Vehicle Specifications
- Operating Instructions Manuals
- Operations and Maintenance Plan
- Fleet Management Plan

11.2.2 Locomotive

The commuter rail locomotives used on the UTA system were manufactured by MotivePower Inc. Their general specifications are as follows:

Table 11-2: Locomotive Dimensions

Type	(B-B) 0440
Max. Height	15 feet 5 inches
Width	10 feet 7.5 inches (over cab handrails)
Length	70 feet (over coupler faces)
Weight	291,000 pounds Nominal
Top Speed	79 mph

11.2.3 Commuter Passenger Vehicles

11.2.3.1 Wheelchair Accommodations

Provisions shall be made to comply with the latest ADA requirements.

11.2.3.2 Bi-level Commuter Rail Cars

Commuter Rail Bi-level cars used on the UTA system were manufactured by Bombardier, Inc. The general dimensions are as follows:

Table 11-3: Commuter Rail Bi-level Cars Dimensions

	Cab cars	Coach Cars
Type	Bi-level	Bi-level
Max. Height	15 feet 11 inches	15 feet 11 inches
Width	9 feet 10 inches	9 feet 10 inches
Length	85 feet (over coupler faces)	85 feet (over coupler faces)
Weight	122,000 pounds (approximate)	119,000 pounds (approximate)
Top Speed	95 mph	95 mph
Seats	133-136	126-130

11.2.3.3 General

The vehicles shall be designed to be in full compliance with all applicable Federal Railroad Administration (FRA) rules and regulations, Association of American Railroads (AAR) Standards, and American Public Transportation Association (APTA) Standards in effect at the time of contract award.

The maximum operating speed of the vehicles shall not be less than 79 miles per hour (mph).

Clearance shall, at a minimum, meet the requirements of Amtrak drawing No. A-06-7577, Rev. Nil, except where noted (including the side steps, mirrors, and pilot). Refer to Appendix A for Amtrak drawing No. A-06-7577 Rev. Nil. Also, refer to Chapter 3 'Running Way and Track Design'.

11.3 High Voltage System

The head-end power shall operate at a nominal 480 Volts alternating current (Vac), three-phase, 60 Hertz (Hz) Carbome equipment is required to function at its rated performance level within a voltage range of 430 to 530 Vac, and a frequency range of 57 to 63 Hz.

The vehicle shall be configured to connect to wayside power. This power, supplied to the vehicles during layover shall be at 480 Vac, three-phase, 60 Hz from a wayside power source.

The nominal voltage from both the direct current (dc) low-voltage system and the dc low-voltage trainline system shall be set at a nominal 72 Volts direct current (Vdc).

11.4 Light Rail Vehicle

11.4.1 General Description

This section outlines the basic attributes of the Light Rail Vehicles (LRVs) that will be utilized by UTA. The information contained herein is intended to define generally the composite aspects of the vehicle, particularly in relation to its interfaces with other parts of the UTA light rail system. Since the vehicle is a composition of "off-the-shelf" equipment, these criteria apply to the limits that the design of available equipment shall meet. Consequently, the actual vehicle shall generate criteria that influence traction power and structural detailed design. This data should be readily available soon after the procurement decision is made. Until that decision, the following LRV criteria will apply, with an understanding that modifications may be necessary once the specific actual vehicle is determined.

11.4.1.1 Vehicle Operation

The LRV shall be capable of full bi-directional operation and shall be equipped with fully functional, identical operator cabs at each end. The LRV shall be designed to operate over UTA's complete Light Rail Transit (LRT) system, either alone or in multiple consists of up to four LRVs.

11.4.1.2 Traction Power Interface

- Nominal OCS voltage: 750 Vdc
- Maximum operating voltage: 900 Vdc
- Minimum operating voltage: 525 Vdc

11.4.1.3 Vehicle Voltage Limits

The vehicle upper voltage limit shall be set to maximize the benefits of regeneration, without exceeding 950 Vdc. The vehicle equipment shall be designed to function at a lower limit of 450 Vdc. All equipment shall be capable of operating without damage at any voltage between these two limits. If voltages fall outside of these limits, vehicle systems shall automatically shut down, triggering an emergency brake application.

11.4.2 Weight Constraints and Design Loading

As a baseline, the composite vehicle meeting UTA's current vehicle dimensions shall not weigh more than the following maximum limits:

- AW0 (Empty Car) 43.1 metric tons (98,000 pounds (lb))
- AW1 (Seated Load) AW0 + 75 passengers = 111,000 lb
- AW2 AW1 + 90 standees = 125,000 lb
- AW3 AW2 + 45 standees = 132,000 lb
- AW4 (Crush) AW3 + 45 standees = 139,000 lb

A minimum of 60 seats per vehicle is required.

Equipment installation shall be arranged such that its weight is evenly distributed to the maximum practical extent. The vehicle, complete with all necessary apparatus, shall meet the following criteria:

- The difference in static weight as measured under each motor truck shall not exceed 2%.
- The difference of static weight between the A-end and B-end of the vehicle shall not be more than 900 kg (2,000 lb).
- The lateral imbalance shall not exceed 290 kg-m (25,000 in-lb).

11.4.3 Light Rail Vehicle Dimensions

Vehicle dimensions shall not exceed the following (all heights are from top of rail):

Table 11-4: Light Rail Vehicle Exterior Dimensions

Description	Dimension
Length over the coupler faces	26,975 mm (88.5 ft)
Exterior width	2,650 mm (104 in)
Car floor height (nominal)	1004 mm (39.5 in)
Top of roof-mounted equipment	3,800 mm (150 in)
Top of pantograph in locked-down position	3,730 mm (146.85 in)

Table 11-5: Light Rail Vehicle – Other Dimensions

Description	Dimension
Ceiling height from floor	2,083 mm minimum (82 in)
Width of side door openings	1,220 mm minimum (48 in) 1,320 mm maximum (52 in)
Height of side door openings	1,930 mm minimum (76 in)
Pantograph operating range	4,064 mm minimum (13 ft 4 in) 7,010 mm maximum (23 ft)

11.4.4 Vehicle Performance

The performance of the LRV is defined for operations on dry, level, tangent track. This includes AW2 loading for acceleration performance and AW3 loading for deceleration performance, applicable across the specified range of wheel wear, and in conditions without significant wind. The OCS voltage shall be at the nominal 750 Vdc for propulsion. In braking, the braking system shall perform as specified at any line voltage within the specified range.

11.4.4.1 Speed Requirements

- Minimum balancing speed: 90 km/h (55 mph)
- Maximum operating speed: 92 km/h (57 mph)
- Nominal operating speed: 90 km/h (55 mph)

11.4.4.2 Wheelchair Accommodations

Appropriate provisions shall be made to ensure compliance with the latest Americans with Disabilities Act (ADA) requirements.

END OF CHAPTER 11.

DESIGN CRITERIA MANUAL

/ CHAPTER 12

ELECTRIC TRACTION POWER SUPPLY AND DISTRIBUTION SYSTEM

Table of Contents

CHAPTER 12 ELECTRIC TRACTION POWER SUPPLY AND DISTRIBUTION SYSTEM 1

12.1 INTRODUCTION 1
12.2 REQUIREMENTS 1
12.2.1 Traction Power Substations 1
12.2.2 DC Feeder System 2
12.2.3 Overhead Contact System (OCS) 2
12.2.4 Signal and Communications System Interface 2
12.2.5 Sectionalization 2
12.2.6 Design Environment 3
12.2.7 Codes and Standards 3
12.3 TRACTION POWER SUBSTATIONS 4
12.3.1 General 4
12.3.2 System Operating Requirements 4
12.3.3 Basis for Substation Location, Spacing, and Rating 5
12.3.4 Substation Power Supply 6
12.3.5 Substation Equipment 6
12.3.6 Substation Enclosure 8
12.3.7 Substation Foundation 9
12.3.8 Substation Grounding 9
12.3.9 Ventilation 10
12.3.10 Noise Level 10
12.3.11 Miscellaneous 10
12.4 DC FEEDER SYSTEM 13
12.4.1 General 13
12.4.2 Cables 14
12.4.3 Raceways 15
12.5 OVERHEAD CONTACT SYSTEM 15
12.5.1 General 15
12.5.2 OCS Configuration 17
12.5.3 Operations 18
12.5.4 Contact Wire Height 18
12.5.5 Vehicle Data 19
12.5.6 Climate Conditions 19
12.5.7 Loading 19
12.5.8 Span Lengths and Staggers 20
12.5.9 OCS Conductors 20
12.5.10 Construction and Maintenance Tolerance 21
12.5.11 Factor of Safety 21
12.5.12 Poles and Foundation 21
12.5.13 Electrical Clearances 23
12.5.14 OCS Support Systems 24
12.5.15 OCS Registration Systems 25
12.5.16 Disconnect Switches 25
12.5.17 OCS Tensioning 25
12.5.18 OCS Grounding and Bonding 26
12.5.19 Surge Protection 26
12.6 NEGATIVE RETURN PATH AND STRAY CURRENT CONTROL 26

CHAPTER 12 ELECTRIC TRACTION POWER SUPPLY AND DISTRIBUTION SYSTEM

12.1 Introduction

These criteria include functional and design requirements for the supply, installation, and supervision of traction power for light rail and streetcar transit.

The light rail and streetcar vehicles, as described in Chapter 11, shall be propelled by electric traction motors driving steel wheels through appropriate gearing. Electric traction power shall be supplied to the vehicle from wayside substations through an overhead contact system (OCS) distributing power through a contact wire installed over each running track, upon which a pantograph collector on each car shall maintain contact. Both running rails of each track shall be used for the traction power negative return, except at crossovers or other locations as approved by UTA.

The traction power system shall supply sufficient power to transit vehicles for the safe, efficient, and continuous operations of the transit system. The design of the traction power system shall be coordinated with the electric utility companies who shall provide primary power for the system.

The traction power system design shall be coordinated with other subsystems (e.g., vehicles, civil works, signaling, and communications), including vehicle propulsion and power control operating tolerances. The vehicle auxiliaries shall accept the full range of traction power voltage variations.

12.2 Requirements

The elements described in the following sections shall be included in the traction power supply and distribution system.

12.2.1 Traction Power Substations

The traction power substation (TPSS) consists of all equipment between the interface point with the electric power utility and the interface point with the direct-current (DC) feeder system. Each substation includes alternating-current (AC) cables, utility metering equipment, AC switchgear, transformer/rectifier units, DC switchgear, positive and negative busbars, negative drainage panel, substation housing, grounding system, negative return system,

relay protection system, auxiliary power supply system, heating and ventilation inside the substation (HVAC), batteries and charger, security system, surge arresters, and alarms and control (including SCADA).

12.2.2 DC Feeder System

The DC feeder system includes the positive DC feeder cables from the TPSS to the overhead contact system, the negative DC return cables from the substation to the rails, and any parallel feeders required to locally reinforce the overhead contact system's electrical capacity.

12.2.3 Overhead Contact System (OCS)

The overhead contact system consists of all equipment between and including the positive DC feeder interface and the overhead contact wire. This equipment includes the supporting structures, guys, foundations, conductors, messenger wires, overhead feeders, ancillary wires, hangers, insulators, conductor supports, registration assemblies, hardware, jumpers, tensioning devices, sectionalization equipment, disconnect switches, surge arresters, lightening arrestors, and overhead parallel feeders.

12.2.4 Signal and Communications System Interface

Currently, the TPSSs do not supply power to signal, crossing houses, or other locations. While this could be a consideration for the future, it is not a standard practice at present. Therefore, the design should not assume the traction electrification system will provide power for these systems. Any future changes to this practice will be specifically addressed and coordinated with UTA.

12.2.5 Sectionalization

The DC power distribution shall be of a double end feed type, where electrical continuity between adjacent substations is provided by the OCS. The two mainline tracks, the inbound and outbound, shall be electrically parallel and be provided with the means to power each track independently.

Insulated overlaps, section insulators, and other sectionalization arrangements in the OCS shall be used to allow power to be isolated from track zones. Section insulators shall only be used in slow-speed situations such as crossovers, yard and shop entrances.

The location of all sectionalization shall consider the normal operating characteristics of the vehicles. Where possible, sectionalization shall not be placed near locations where vehicles normally stop, such as station

platforms, at-grade crossings, mid-block pedestrian crossings, signals, and switch locations. Where possible, pantographs from each vehicle in the consist shall not be in two different sectionalization sections with the ability to draw power from two different substation feeder breakers.

Disconnect switches shall be installed at OCS feeding points, and across selected sectioning locations (e.g., overlaps and crossovers) in the mainline to provide flexibility in operations.

The traction power supply to the yard, maintenance shops, and mainline shall be electrically separated. A dedicated (shop) TPSS shall be utilized to power the OCS inside the shop(s). This shop substation shall be located inside the maintenance facility and will be connected to a shop negative return system that shall be solidly grounded to the shop building and shop grounding system. The shop negative return and positive feeds will be isolated from the yard negative return and OCS positive power. Insulated rail joints and OCS section insulators shall be installed at the shop entrance to prevent any unintended connection between the shop and yard traction power systems.

The mainline and yard(s) traction power sources (positive and negative) shall be electrically isolated from each other. The track/negative return circuits shall be electrically insulated from earth and meet the minimum resistance-to-earth criteria for each type of track installation as defined in the Corrosion Control Criteria for stray current protection (see Chapter 16).

Provision(s) shall be provided for emergency interconnection of the yard traction power supply to the mainline traction power system.

12.2.6 Design Environment

The traction power system shall be designed to operate satisfactorily in the environment as described in Chapter 1, Section 1.4, 'Weather Conditions Criteria for Systems Design.'

12.2.7 Codes and Standards

All materials, apparatus, and equipment, as well as installation methods and testing, shall conform to or exceed the requirements of the applicable portions of the latest editions of various codes and standards. These include but are not limited to:

- American National Standards Institute (ANSI)
- National Electrical Manufacturers Association (NEMA)

- National Electrical Code (NEC)
- National Electrical Safety Code (NESC)
- Institute of Electrical and Electronics Engineers (IEEE)
- Underwriters Laboratories (UL)
- International Building Code (IBC)
- Insulated Cable Engineers Association (ICEA)
- Electronic Industries Alliance (EIA)
- American Society for Testing and Materials (ASTM)
- Utah Department of Transportation (UDOT)
- American Concrete Institute (ACI)
- American Railway Engineering and Maintenance-of-Way Association (AREMA)

Additionally, other local and state codes may also apply. The system shall be designed in compliance with industry standards, state, and local codes, and shall adhere to the most stringent of these codes.

12.3 Traction Power Substations

12.3.1 General

DC traction power shall be provided by TPSSs with a rated voltage output of 800 Volts direct current (Vdc) at 100% load. The TPSS receives 12.47 kilovolt (kV) 3-phase, AC power from the local utility and converts it to 800 Vdc (nominal) for distribution to the OCS. The OCS, running rails, and associated connections shall be capable of maintaining a voltage at the Light Rail Vehicle (LRV) no lower than 525 Vdc.

12.3.2 System Operating Requirements

The following shall constitute the basis for electric traction power system design and rating:

- Nominal contact wire voltage 800 Vdc
- Maximum contact wire voltage at no-load 825 Vdc
- Maximum contact wire voltage during regenerative braking 900 Vdc
- Vehicle operating voltage (min.) 525 Vdc
- Maximum rail to ground voltage 50 Vdc

The vehicles are equipped with regenerative braking. The system shall be designed for natural reception only. No power shall be fed back to the utility.

12.3.3 Basis for Substation Location, Spacing, and Rating

The TPSS shall be located, wherever practical, at or near passenger stations. These locations shall be optimized with respect to system safety, system efficiency, right-of-way availability, system availability, stray current control, minimum life cycle cost, operational flexibility, and interconnection to the utility network. Operational requirements as stated below shall be verified by performing a load flow simulation.

Substations shall be located off the mainline to provide sufficient space for maintenance. Substations shall be fenced in areas that are easily accessible to the public.

12.3.3.1 Normal Operation

The TPSS spacing and rating shall be designed to ensure that adequate power is supplied to the system, with all substations operating, to maintain rated train operating performance during peak-hour LRT operating conditions. This includes operating 4-car trains at 10-minute headways in both directions at AW2 loading and includes the simultaneous starting of two 4-car trains at any passenger station.

Streetcar substation spacing and rating shall be designed similarly, ensuring that adequate power is supplied to the system, with all substations operating, during peak-hour streetcar operating conditions with single-car trains at 10-minute headways in both directions at AW2 loading. This includes the simultaneous starting of two single-car trains at any passenger station.

12.3.3.2 Contingency Operation

For the LRT systems, with any one TPSS out-of-service, one 4-car train at AW4 loading shall be capable of starting and accelerating at rated train operating performance as if the system was operating normally. Under these conditions, however, two trains shall be able to start simultaneously at the outage but may accelerate and perform at a reduced operating level. The voltage at the trains shall not fall below the minimum vehicle operating voltage as shown in 12.3.2. A similar condition shall apply to streetcar systems with single-car trains at AW4 loading.

12.3.4 Substation Power Supply

The electric utility company shall provide each TPSS with 3-phase, 60 Hertz (Hz) power circuits as primary service. The present standard service voltage in the Salt Lake Valley is 12.47 kV. Evaluations shall be conducted to determine the most cost-effective investment and the lowest annual operating cost that will provide adequate and reliable service to the LRT or streetcar system.

Normally, a single electric utility company feeder shall supply power to no more than two electric traction substations. These substations shall not be adjacent to each other. In cases where it is unavoidable, utility feeders supplying power to adjacent substations shall be independent and, at a minimum, emanate from different buses. Under emergency conditions, such as where one utility company substation is out of service, a single feeder shall supply power to no more than three electric traction substations.

Separate conduits, ducts, manholes, and cableways shall be provided for the AC supply cables from the TPSS to the interface point with the utility, distinctly separate from any DC cableways.

12.3.5 Substation Equipment

The transformer/rectifier rating shall adhere to an extra heavy-duty cycle as defined: after reaching a steady-state temperature, the rectifier transformer shall run at 150% of its rated load for 2 hours. During this 2-hour period, 5 equally spaced 300% loads shall be imposed on the unit for a 1-minute duration each. At the end of the 2-hour cycle, a 450% load shall be imposed for 15 seconds. At the end of this duty cycle, there shall be no damage to the transformer/rectifier or any of its components. All components shall comply with NEMA requirements.

Prefabricated substations are the preferred type unless suitable property to install them is unavailable. In these instances, a purpose-built substation located within an existing structure will be considered. Substations shall be equipped with high-voltage AC switchgear (incoming circuit breaker), surge arresters, transformer/rectifier units, and DC power switchgear, and shall be designed to operate unattended. All transformer/rectifier units shall be connected in accordance with ANSI Standard C34.2; mainline and yard units shall deliver a 12-pulse, double-way output, and shop substations shall deliver a minimum 6-pulse, single-way output. (See also Chapter 14 Communications)

Transformer/rectifier shall be self-ventilated dry type Class AA, suitable for indoor service. Silicon diode rectifiers shall be free-standing indoor type, metal enclosed, naturally convection air-cooled. The transformer/rectifier units

shall be rated extra-heavy traction rating class, in accordance with the above-defined extra heavy-duty cycle. The harmonic characteristics shall comply with utility requirements and IEEE 519, whichever is stricter.

The DC feeder breakers shall be indoor, metal enclosed, drawout, 800 Vdc rated, single-pole, high-speed, capable of interrupting the maximum short-circuit current available. A bolted link shall be provided to disconnect the rectifier from the DC positive bus.

Auxiliary equipment shall include a communications cabinet, SCADA devices, surge protection, interconnecting buswork, a 125 Vdc battery, and space for the provision of stray-current monitoring devices. For stray current corrosion control data, see Chapter 16.

The substation equipment shall have provisions to monitor and control the AC and DC breakers, monitor major alarms & status for the equipment and protective relaying within the TPSS, and associated pad mount DC disconnect switches. The TPSS controls shall have a local and remote setting that is located in each TPSS. The normal mode will be set to remote. Remote Control function operations will be dictated by standard operating procedures (SOPs) developed in agreement between MOW, engineering, and operations departments. *NOTE: If there is not currently a written agreement on how the TPSS will be operated where the remote functions are activated, it should be considered.*

DC Feeder breakers shall be installed to provide discreet isolation of OCS sections. DC Feeder breakers shall be equipped with direct-acting instantaneous overcurrent rate-of-rise, multi-stage time overcurrent, and automatic reclosure relaying. Feeder breakers shall be designed with the capability of direct transfer trip between substations. The protection shall open all breakers feeding a faulted section.

At the mainline substations, there shall be 2 configurations for DC feeder breakers. Configuration 1 will have 2 feeder breakers that provide 800 Vdc power to 2 feed points on the overhead contact system for both tracks in each direction. Configuration 2 will have 4 feeder breakers that provide 800 Vdc to 4 feed points on the overhead contact system to each track individually in each direction.

Each utility feeder line shall be provided with revenue metering in accordance with the requirements of the electric utility.

All AC and DC voltage and current monitoring shall be provided via the new updated protective relays:

- AC line current
- AC bus voltage

- DC positive bus voltage
- DC feeder line current
- DC feeder voltage
- DC negative bus voltage (mainline substations and yard negative bus)
- DC leakage current (shop negative bus)
- Facilities for future connection of stray current measurement

LRT substations shall typically have four DC breakers (minimum) for individual track sections. End of line LRT substations may have two DC feeder breakers; however, space shall be provided for additional breakers for future extensions at end of line.

Streetcar substations shall have, at minimum, two DC breakers for outbound and inbound routing with provisions to add additional breakers at end-of-line locations for future expansion.

12.3.6 Substation Enclosure

All TPSSs shall be designed to meet basic safety and fire protection requirements. TPSSs shall be considered as Group B, Division 4 occupancies where referencing the International Building Code[1] for occupancy-related requirements. Additionally, substation enclosures shall comply with the current seismic code.

The basic requirements to be incorporated into the building design shall include the following:

- Emergency access to and egress from the TPSS shall conform to local fire codes and the Uniform Building Code, ensuring quick and safe evacuation or entry during emergencies.
- Emergency lighting and exit signs shall adhere to local codes, the Uniform Building Code, and standards specified in Fixed Guideway Transit Systems[2].
- TPSS shall be equipped with an automatic fire detection system and portable fire extinguishers, complying with Chapter 38 of the Uniform Building Code and relevant local codes.
- Substation doors shall be monitored by a security system. Entry by unauthorized persons shall be prevented by means of locks and special keys. Wayside electrical control equipment and switches shall be secured by key locks.

[1] *International Building Code*. Country Club Hills, IL: International Code Council, Inc., current edition.

[2] *Fixed Guideway Transit Systems* (NFPA 130). Quincy, Massachusetts: National Fire Protection Association, 1997.

12.3.7 Substation Foundation

The design of the TPSS foundation shall conform to established civil and structural engineering practices and standards set by the American Society for Testing Materials (ASTM) and American Concrete Institute (ACI) standards, along with other applicable local codes. The foundation shall be structurally capable of supporting the live and dead loads of the TPSS equipment during installation, operation, maintenance, and rehabilitation.

12.3.8 Substation Grounding

The traction power system shall be designed to ensure safety for both personnel and the overall system. The grounding system design shall mitigate any unsafe conditions for system personnel, patrons, or the community. Each substation shall be equipped with a minimum 2-inch by ¼-inch copper ground bus and necessary cabling to a substation grounding grid.

Noncurrent-carrying metal enclosures or parts of alternating current equipment, including AC apparatus and transformers/rectifiers, shall be securely connected to the ground grid.

Enclosures for traction power rectifiers, DC switchgear, and DC busways shall be installed insulated from the ground, and each shall be connected to the substation ground grid through a low-resistance ground fault detection system. The ground fault detection system shall detect both energized enclosure as well as grounded enclosure conditions.

The main negative bus of each TPSS shall be connected to the return negative bus through a shunt for current measurement purposes.

Pole-mounted disconnect switches and surge arresters shall be grounded by an independent ground cable directly attached to a grounding system, such as ground rod(s) or ground mat, with a maximum ground resistance of 5 ohms.

Pad-mounted disconnect switches installed adjacent to TPSS locations shall be connected to the TPSS ground grid, with a maximum ground resistance of 5 ohms.

The DC system shall normally be operated ungrounded. The traction power transformer/rectifier output (DC) windings shall be isolated from the ground.

Ground grids, consisting of driven ground rods and conductor mats embedded in the earth, shall be designed for safe step-and-touch potentials as specified in IEEE 80. These grid materials should be resistant to corrosion by the earth's chemistry.

The incoming feeder ground and the facility ground shall be connected to separate systems.

Maximum step-and-touch voltage shall not exceed the allowable values defined in IEEE 80 for AC systems.

12.3.9 Ventilation

The substations shall include an HVAC system to maintain the substation temperature at a level that permits the traction transformers and rectifiers to operate at their design load cycle. A minimum of two units shall be furnished for each substation; each unit shall be rated to provide 75% of the total substation cooling capacity requirement. The HVAC system shall have units' cooling fans spaced and located within the substation to achieve the most efficient cooling capacity of the space. These units will be designed with lead/lag capabilities.

12.3.10 Noise Level

The outdoor TPSS sound level shall be limited to the levels specified in Chapter 2.

12.3.11 Miscellaneous

12.3.11.1 Interior and Exterior Lighting

Interior lighting shall be provided by energy-efficient light fixtures. The design shall ensure a minimum maintained lighting level of 30-foot candles vertical, average. Lighting shall illuminate the vertical surfaces of equipment, such as switchgear and transformer/rectifier units, and shall be located to avoid glare on the front of the devices or meters. The placement of lighting fixtures shall be coordinated to avoid interference with overhead raceways or other major wiring and shall not be directly above switchgear, rectifiers, or transformers.

Exterior lighting shall be provided by LED fixtures or equivalent, with unit photo-cell control. The design shall ensure a minimum illumination level of 2-foot candles at ground level. General lighting shall be controlled by a main switch and an override switch located inside the TPSS near each access door. The override switch shall allow testing of exterior lighting during daylight hours.

12.3.11.2 Emergency Lighting

Substations shall be equipped with emergency lighting consisting of rechargeable Lithium-ion, valve regulated lead–acid (VRLA), or approved equivalent batteries and battery chargers internal to the lighting fixtures. A sufficient number of fixtures designated as emergency lights shall be provided to illuminate the area as required by code(s).

12.3.11.3 Convenience Outlets

Two duplex convenience outlets shall be conveniently located around the interior walls of the TPSS. Interior outlets shall be dedicated 20-Amp duplex outlets, ground-fault circuit interrupter (GFCI) protected. One outlet shall be located near the switchgear and rectifier to permit use of a heavy-duty vacuum cleaner or up to ½-horsepower portable air compressor. Two weatherproof duplex outlets located on an exterior wall of the TPSS shall be provided with outlet covers and tamper-proof screws. Exterior outlets shall be 20-Amp duplex, GFCI protected.

12.3.11.4 Intrusion System

TPSS and exterior equipment access doors shall be equipped with an electro-mechanical intrusion detection device on each door. This device will annunciate the position of the door(s) both locally and remotely. The system is backed up from the TPSS battery via the programmable logic controller (PLC).

12.3.11.5 Fire Alarm System

The fire alarm system shall be provided as per current code requirements and will monitor and annunciate smoke and fire alarms locally and remotely. The system shall have an internal battery/charger for emergency operation where utility power is unavailable, providing 90 minutes of backup power.

Intrusion and fire alarm data shall be transmitted via the SCADA system (See Chapter 14).

12.3.11.6 Safety and Maintenance Equipment

An emergency portable eye-wash unit and fire extinguishers shall be provided, suitably located inside each substation enclosure in accordance with the most current OSHA requirements.

Separate test stations shall be provided for the testing of withdrawable AC and DC circuit breakers in each of the TPSSs.

A countertop shall be provided for reviewing drawings and manuals. Laminated sectionalization drawings shall be placed on a wall near the countertop. TPSS as-builts and O&M manuals shall be provided in electronic format and printed versions, placed in binders, and turned over to the UTA.

12.3.11.7 Auxiliary Power

Power for substation services (240/120 Vac) in and about the enclosure shall be provided. These loads include, but are not limited to, lighting, battery charger, and climate control.

12.3.11.8 Uninterrupted Power System Battery

Maintenance-free batteries and a battery charger shall be used as a backup power source for essential protection devices and substation equipment controls & operations for a minimum of 8 hours in the event of a utility power failure. The maintenance-free batteries shall have a 15-year warranty.

12.3.11.9 Working Space

Sufficient working space shall be provided within the enclosure to permit movement of major pieces of equipment and the performance of maintenance functions.

12.3.11.10 Maintenance Access

The TPSS shall be situated to allow access so that the removable AC and DC breakers can be taken through an access door(s) and loaded (rolled) onto a truck directly. The major components shall have access panels that are hinged and will allow suitable access to remove and replace the largest component with the compartment.

12.3.11.11 Supervisory Control and Data Acquisition (SCADA)

Each TPSS shall be equipped with Supervisory Control and Data Acquisition (SCADA) capabilities. The SCADA functionality of all TPSS units for an LRT and streetcar line shall be connected via a fiber optic network to an Operations Control Center (OCC) at a Rail Service Center. This interface is for monitoring and controlling TPSS operation. SCADA shall enable the control of remotely opening all AC and DC breakers, but only the closing of DC breakers. It shall also provide status and alarms for all elements included on the annunciator panel. Bus and line voltage, along with any other status as defined in Chapter 14, will be transmitted to the OCC. TPSS intrusion detection, smoke/fire alarm, and emergency trip activation shall be included in the SCADA remote annunciation.

A fiber optic network connects all TPSS units for an LRT or streetcar line to a SCADA server at the relevant OCC in a Rail Service Center. The server supports workstations which provide monitoring and control of the assigned TPSS units. For additional information, refer to Chapter 14, Section 14.3.3 'Signaling Communications & TPSS SCADA Fiber Optic Cable'.

12.4 DC Feeder System

12.4.1 General

The DC feeder system shall consist of cables and raceways designed to supply power from the substation to the OCS and return current from the running rails to the substation. Feeder cables shall be insulated, conform to ICEA standards and specifications, and be suitable for both wet and dry locations. The raceway from the substation to the feeder pole foundation shall be underground. The design of the ductwork, embedment depth, and manhole spacing shall adhere to the requirements set by the NEC.

At the point where the feeders connect to the OCS, surge protection shall be installed.

Separate conduits, ducts, manholes, and cableways shall be provided for the positive DC feeder cables from the substation to the interface with the OCS and for the negative DC feeder cables from the substation to the running rails, separated from the AC cableway. The cableway requirements shall be coordinated with both UTA and the utility.

The basic requirements to be incorporated into the design of raceways and cables shall include the following:

- All material manufactured for use as conduits, raceways, ducts, boxes, cabinets, equipment enclosures, and their surface finish materials shall withstand temperatures of 932°F (500°C) for 1 hour and shall not support combustion under the same temperature condition.
- All conductors except those specifically excluded by UTA, shall be insulated. The minimum thickness of insulation and jacket shall conform to the ICEA and National Electric Code®[3].
- All insulation shall conform to Article 310 of the National Electric Code® and be moisture and heat-resistant types carrying temperature ratings corresponding to the conditions of application. Only insulation materials designed for temperature ratings higher than 194°F (90°C) shall be used.

[3] *National Electric Code®* (NFPA 70). Quincy, Massachusetts: National Fire Protection Association, 1993.

- All cables in open raceways and in underground areas shall meet the flammability requirements of IEEE 383[4] and the smoke emission requirements of NFPA 258[5].

12.4.2 Cables

Feeder conductors shall be insulated, non-shielded, single conductors suitable for use in wet or dry locations and rated 2,000 Vdc, 90℃ conductor temperature for normal operation, 130 °C for emergency operation, and 250℃ for short-circuit conditions. The conductors shall be copper, conforming to ASTM B189 material, with EPR insulation and low smoke jacket. All copper cables shall have some method of permanently identifying the owner (UTA) on the copper conductor. This shall include center marking or stamped core, or any other method, approved by UTA, that will allow traceability of that cable for its operational life. Positive feeder and negative return cable shall be class G 259 strand conforming to ASTM B173.

Traction power cables connecting DC feeder breakers to the overhead contact system, and from running rails to the negative bus, shall be sized to accept maximum overload and short-circuit currents with a temperature rise not to exceed safe design limits of the cables.

Feeders shall be standardized on a single-conductor size by using multiple conductors for different amperages. The cables shall have sufficient conductivity to maintain traction power voltage levels at the required level. Traction power feeder cables shall be sized to operate at rated insulation temperature during normal operating conditions.

The positive and negative traction power cables, where installed in exposed locations, shall be adequately supported on insulated racks or trays, and shall be so located as to minimize the possibility of incurring physical damage. Flame-resistant jacketed cables shall be used in such installations.

The DC feeder cables from the substation to the OCS shall not be spliced. Parallel underground DC feeder cable splices shall be allowed in manholes where necessary.

All cables shall be clearly identified on the termination points as well as inside all of the manholes.

---

[4] *Qualifying Electric Cables and Splices for Nuclear Facilites* (IEEE 383). Washington, D.C.: Institute of Electrical and Electronics Engineers, Inc.,

[5] *Recommended Practices for Determining Smoke Generation of Solid Materials* (NFPA 258). Quincy, Massachusetts: National Fire Protection Association,

12.4.3 Raceways

Feeder ductwork, which shall be buried underground, will consist of conduit encased in red dyed concrete. The design of this ductwork, including aspects such as conduit size, design cable pull, maximum total angular turn, minimum embedment depth below grade, manhole spacing, and duct gradient, shall comply with NEC requirements. Feeder ductwork shall be clearly marked for safety, identified by a red or yellow warning tape 6 inches wide and inscribed with "Warning–High Voltage," laid 12 inches above the concrete encasement in backfill.

The feeder ductwork shall be run as directly as practicable and be situated to avoid interference with foundations, piping, and other similar underground structures. Conduit risers shall be provided at feeder connections to the OCS.

Manholes and pull boxes shall be strategically placed to facilitate the installation of cables. The use of pull boxes is preferred, and the decision to use a manhole or a pull box shall be determined on a site-specific basis. The number of ducts installed shall include 20% spare capacity or a minimum of two spares to accommodate additional cables for positive feeder raceways and negative return raceways.

All manholes and respective conduits shall be clearly labeled for identification.

12.5 Overhead Contact System

12.5.1 General

The Overhead Contact System (OCS) encompasses the overhead conductor system and the associated physical support system.

The OCS consists of the conductors, including the contact wire and supporting messenger wire, in-span fittings, insulation, jumpers, conductor terminations, and associated hardware located over the track. The system enables power drawing by the vehicle through direct physical contact between the pantograph and contact wire. The OCS shall ensure proper current collection under all operating conditions.

The physical support and registration system includes foundations, poles, guys, insulators, brackets, cantilevers, pull-offs, backbone assemblies, and other assemblies and components necessary to support and/or register the OCS in the correct overhead configuration. The support and registration system shall support the OCS in accordance with allowable loading, deflection, and clearance requirements by AREMA, NESC, and other applicable local codes. The OCS support and registration system shall incorporate double insulation.

The DC feeder system consists of feeder conductors, feeding jumpers, switches, ductwork, and associated hardware that feed power to the OCS. The feeder system, in combination with the OCS, shall supply traction power from the substations to the vehicles within the allowable voltage limits.

Refer to 12.5.18 'OCS Grounding and Bonding', for additional system components.

The OCS shall be electrically continuous from substation to substation. At substations, the OCS and applicable underground parallel feeders shall be sectionalized for isolation of each electrical section. An arrangement providing continuity and flexibility for sectionalization of the OCS during substation repair or maintenance shall be included, utilizing sectionalization and disconnect switches.

Mainline feeder disconnect switches shall be pad-mounted. At crossover, yard, and shop locations, pole-mounted disconnect switches are permissible. At yard and shop locations, pole-mounted disconnect switches shall be lockable at the base handle, with operational handles at 3.5 feet above the base of the pole (ground level). All disconnect switches shall be made of fiberglass and be lockable.

In addition to sectionalizing at the substations, the OCS shall be sectionalized at crossovers, or other special trackwork locations, and in the yard, to provide for flexibility in LRT operations and maintenance to match the operating plan.

Jumper cables shall be provided to maintain electrical continuity at special trackwork locations where it is necessary to have a physical separation in the OCS. At locations where jumper cables are used to provide full-feeding electrical continuity, they shall be equal to or greater than the electrical capacity of the OCS circuit ampacity.

The OCS shall allow for train consists operating with one to four pantographs without causing excessive oscillation in the OCS or the pantograph. The OCS shall be designed according to current AREMA recommendations, maintaining pantograph clearance from the OCS support system at all times.

The OCS design shall be based on technical, economical, operational, and maintenance requirements as well as on the local climatic conditions which are outlined in these criteria.

Design factors for maintaining interface between the pantograph carbon collector strip and the contact wire shall include, as a minimum, OCS conductor blow-off, temperature, contact wire deviation due to movement of hinged cantilevers, mast deflection under operational loads, vehicle roll and lateral displacement, pantograph width and sway, track maintenance tolerances, and OCS erection tolerances.

12.5.2 OCS Configuration

An auto-tensioned simple catenary system (ATSC) consisting of a messenger wire supporting a contact wire by means of hangers, shall be used for the mainline at-grade railroad right-of-way and on elevated guideway. The conductors shall be tensioned by means of auto-tension devices. The catenary system shall be supported by hinged cantilevers attached to wide flange or tubular galvanized steel poles located between the tracks wherever possible. If necessary, at special locations such as track crossovers, turnouts, curves, and junctions, poles may be located on the outside of the track. A headspan configuration may be used in multi-track areas if single poles cannot be installed.

A fixed termination single wire (FTSW), consisting of a contact wire, shall be used in yards, shops, and may be used at tight track curves or complex major intersections. The conductors shall utilize fixed or adjustable terminations to allow for variable tensions in the conductors or seasonal adjustments. This configuration is utilized where auto-tensioned OCS interfaces with tight track curves and/or complex major intersections (with multiple track moves). Such onerous track geometry complicates the use of auto-tensioned catenary. Due to electrical demands, parallel feeders may need to be installed and connected to the contact wire to supplement the OCS capacity. The contact wire in the yard shall be supported by means of single or back-to-back pole-mounted cantilevers, bracket arms, cross-spans, and headspans. In the shop, the system shall be suspended from the building structure.

A low-profile auto-tensioned simple catenary system (LPATSC), consisting of a messenger wire supporting a contact wire by means of hangers at a reduced system height, may be used in street-running environments in lieu of a single contact wire.

An overhead contact rail system, consisting of a contact wire supported by a channel, may be used where applicable.

The OCS configuration along an alignment shall be determined by mutual agreement between UTA and the stakeholders in each area of the project.

In single wire areas, where installation of a messenger wire is not feasible, parallel feeders connected to the OCS shall be utilized to satisfy the electrical load requirements of the traction power supply system. Parallel feeders shall be underground where possible.

12.5.3 Operations

The OCS shall be designed for LRT and streetcar vehicle operations, considering track criteria specified in Chapter 4 and vehicle criteria specified in Chapter 11.

The OCS shall be designed for multiple pantograph operation, with pantographs spaced in accordance with the specified train consists.

12.5.4 Contact Wire Height

The contact wire height for various alignment segments shall be in accordance with the NESC or local requirements as follows:

Table 12.1: Contact Wire Height Specifications by Trackway Environment

Trackway Environment	Minimum Wire Height Above Top Rail
Exclusive LRT track in dedicated rail corridor	18 feet (preferred); 15 feet (target minimum[1,2]); 14 feet 3 inches (absolute minimum[1,2])
Joint use LRT/freight track	Per AREMA standards [4]
LRT in street with mixed traffic in same lane or exclusive LRT being crossed by roadway at grade	18 feet (preferred minimum[3]); 15 feet (absolute minimum[3])
LRT in pedestrian-only (restricted vehicles) street	16 feet (preferred minimum)

Notes

1. Requires special OCS structures and may not be suitable for higher speeds.
2. LRV pantograph may be close to its "lockdown" height. Coordinate with vehicle designers and UTA vehicle maintenance staff.
3. Per the National Electrical Safety Code, the trolley contact wire shall not be less than 18 feet above the top of any roadway pavement under any condition of loading (including wind and ice loading) or temperature. Exceptions from the code shall be obtained for any clearance less than that minimum.
4. To be coordinated with operating freight railroad.

These values are provided for the worst combination of tension, sag, temperature, construction and maintenance tolerances, and applicable electrical clearances. These dimensions should be reviewed in conjunction with the table in Section 3.7.4.

At critical locations (restricted clearance under bridges) or fixed track work points (e.g., grade crossings, and embedded or direct fixation track work), no allowance shall be made in the OCS design for track lift. At non-critical locations, the OCS design shall allow for a future track lift of up to 3 inches.

The maximum gradients for contact wire change in elevation relative to the track elevation shall be in accordance with the AREMA Chapter 33 as follows:

Table 12.2: Maximum Gradient Specifications for Contact Wire Relative to Track Elevation by Speed Limit/Location

Speed Limit/Location	Maximum Gradient
Yard	2.3%
30 mph	1.3%
45 mph	0.8%
55 mph	0.7%
60 mph	0.6%

Except for the yard, the change of grade from one span to the next shall not exceed one-half of the value shown.

12.5.5 Vehicle Data

See Chapter 11.

12.5.6 Climate Conditions

The OCS design shall be based on the National Electric Safety Code and the climatic parameters described in Section 1.4, 'Weather Conditions Criteria for Systems Design.' A wind velocity of 4 feet per second will be used instead of 2 feet per second where calculating the loads imposed on the OCS.

12.5.7 Loading

Loading shall be based on the most current version of NESC Rule 250-B, combined wind and ice loading, heavy loading district:

- 4 pounds per square foot horizontal wind pressure.

- ½ inch radial ice on conductors.
- 0.3 pounds per foot constant added to the resultant.
- 0°F (–18°C) temperature.

12.5.8 Span Lengths and Staggers

The span lengths are the spacing between messenger wire or single contact wire support points. Span lengths shall be designed within the parameters of the project and shall take into consideration other design considerations.

To minimize the possibility of harmonic oscillation in the OCS, not more than four equal spans shall be located successively in areas where expected track speeds exceed 45 mph. A span which is at least 10% shorter or greater shall be inserted to minimize the possibility of any sympathetic oscillation.

Stagger is the deliberate lateral displacement of the contact wire at each support to the left or right of the perpendicular track centerline. The contact wire shall be staggered on both tangent and curved track. On tangent track, the wire is staggered primarily to achieve uniform wear of the pantograph carbon collector strip. On curved track, the stagger achieves the tangent/chord construction necessary for the "straight-wire" OCS to negotiate the curve. Staggers shall be designed to provide for pantograph security (i.e., no pantograph dewirement) and to maintain good current collection and uniform wear of the pantograph carbon collector. Pantograph security is established by maintaining a minimum contact wire edge distance (from the horn of the pantograph) of 4 inches under worst operating condition.

The design shall consider the effects of environment, track geometry, vehicle and pantograph sway, and installation and maintenance tolerances. Vehicle roll into the wind shall be taken as equal to 50% of the maximum dynamic roll value, in accordance with AREMA Manual, Chapter 33, Part 4.

12.5.9 OCS Conductors

The contact wire shall be solid grooved hard-drawn copper, conforming to ASTM Specification B47 (size: 350 MCM).

The messenger wire shall be standard hard-drawn copper, conforming to ASTM Specification B189, (size: 500 MCM), with stranding conforming to ASTM Specification B8, Class B or higher.

All copper cables shall have some method of permanently identifying the owner (UTA) on the copper conductor. This shall include center marking or stamped core, or any other method approved by UTA, that will allow traceability of that cable for its operational life.

In the design for conductor tension, the following shall be considered:

- 30% cross-sectional area loss due to wear of contact wire.
- The effect of temperature change on all conductors.
- NESC.

12.5.10 Construction and Maintenance Tolerance

The purpose of the OCS is to provide electrical power to the LRV, via the pantograph collector. Consequently, it is vitally important that the contact wire is installed correctly above the as-built track work. Construction tolerances shall be:

- Contact wire height (CWH) shall be 0 inches to +3 inches at all locations, subject to gradient criteria.
- In general, the messenger wire is to be installed above and vertically in line with the contact wire. Allowable tolerances are given below. Messenger wire stagger (relative to contact wire):
    - System heights up to 1 foot 6 inches = ½ inch.
    - System heights 3 foot 0 inches = 3 inches.

Maintenance tolerances shall be developed during final design.

12.5.11 Factor of Safety

The OCS conductors shall be designed in accordance with the factors of safety outlined in the NESC under the specified loading conditions.

12.5.12 Poles and Foundation

Outside of a street-running environment, poles shall be wide flange galvanized steel with steel base plates. Within street-running environments, the poles shall be round tubular galvanized steel with steel base plates and support single contact wire or low-profile catenary. “H” poles with shrouds or equivalent shall be used for balance weight poles. The pole finish shall be in accordance with UTA’s final recommendation. All poles, except those on selected structures, shall be installed on cast-in-place reinforced concrete foundations with embedded anchor bolts. On

structures, the poles shall be supported by means of anchor bolts installed through the deck or cast into piers. Poles shall be grounded by a bonding cable attached to a grounding plate, which shall be installed as part of the foundation installation. Feeder poles shall have grounding rated at 5 ohms or less, and all other poles rated at 25 ohms or less. The pole grounding plate, foundation bolts, and reinforcing bars shall be electrically connected. Poles shall be sized in accordance with NESC Rule 260. In particular, the following overload factors shall be applied to the calculated loads:

Table 12.3: Overload Factor Specifications for Various Load Types

Load Type	Overload Factor
Gravity	1.50
Ice	1.50
Wire (radial)	1.65
Wind	2.50

In addition to the NESC heavy loading and load factor requirements, the poles shall be designed to withstand the following combined loads with the overload factors shown applied to the calculated loads:

Table 12.4: Combined Load Overload Factor Specifications

Load Type	Overload Factor
Gravity with ice	1.50
Wire tension at angles	1.65
21 lb/ft^2 horizontal wind	1.00

This set of conditions is similar to NESC Rule 261-A.1.a and 250-C, except that the conductor loads are also included in this case.

Anchor bolt patterns shall be selected to provide a one-on-one relation between pole and foundation, based on matching strength. Double nuts shall be used to secure the pole base to foundations.

The pole deflection due to live loads plus foundation rotation during train operation shall be no more than 2 inches at contact wire height. Pole deflection at the top of the pole under NESC heavy loading condition, excluding

live loads, shall be no more than 3% of pole length. Poles shall be raked back to compensate for static loads. Overload factors shall not be applied in the calculation of pole deflection.

Foundation design shall be coordinated with the track designers. The design and construction of the pole foundations and guy anchor foundations shall conform to established civil and structural engineering practices, ASTM and ACI standards, and other applicable codes. The foundations shall be reinforced concrete and shall be capable of withstanding the design load imposed during installation, operation, and maintenance.

Guy foundations should be set in line with the restrained conductor to avoid bending stress in the pole due to conductor tension.

12.5.13 Electrical Clearances

The following clearances shall be maintained between live conductors (including pantograph) and any grounded fixed structures in accordance with the AREMA Manual, Chapter 33, Part 2, Table 23-2-2 as follows:

Table 12.5: Electrical Clearance Requirements for Live Conductors and Grounded Structures

	Static	Passing
Normal Minimum	4 inches	3 inches
Absolute Minimum	3 inches	3 inches

Static clearance is the clearance between the OCS or pantograph, where not subject to pantograph pressure, and any grounded structure. Passing clearance is the clearance between the OCS or pantograph and any grounded structure under actual operating conditions, during the time it takes the train to pass.

Mechanical clearance from the pantograph to any fixed item, excluding the steady arm or registration pipe of the cantilever, shall not be less than 3 inches. Clearance to steady arms and registration pipes shall not be less than 1½ inches.

For vehicle-related clearances (see Chapters 3 and 11), full allowance shall be included for dynamic displacement of the vehicle under operating conditions (including track and other installation and maintenance tolerances).

12.5.14 OCS Support Systems

Various OCS support systems are required to suit the different styles of OCS and their applications. They shall be double insulated to limit leakage currents and to permit "live-line" maintenance operations.

12.5.14.1 Cantilevers

The general type of support shall be either the single-track cantilever or center pole back-to-back cantilever brackets. The mast attachments shall be fitted with hinge pins to allow for along-track movement of the OCS conductors due to temperature changes, where used in an auto-tensioned system.

12.5.14.2 Headspans

Multi-track supports shall be required at certain locations, typically at passenger stations and crossovers. To minimize overhead clutter, 3-wire headspan support arrangements shall be used, preferably over portal structures. The support assemblies shall allow for along-track movement of the conductors.

12.5.14.3 Cross-spans

In downtown intersection areas and in the yard, simpler support arrangements are required for either multi-track situations or for crossing intersections. Simple 1- or 2-wire cross-spans shall be utilized.

12.5.14.4 Bridge Attachments

Attachments may be necessary at certain overhead and under-grade bridges. Provisions shall be made for the proper grounding of under-bridge attachments.

12.5.14.5 Overhead Bridges

Wherever practicable, attachments shall not be made to overhead bridges. Where clearance limitations or along-track length of the bridge make attachment a necessity, the number shall be limited. To minimize pantograph bounce, and loss of contact between the pantograph and contact wire, a soft resilient type suspension assembly shall be used.

12.5.14.6 Under-grade Bridges

Supports shall not be located on under-grade bridges, except in situations where the bridge span is greater than the allowable OCS span.

12.5.15 OCS Registration Systems

12.5.15.1 Pull-offs

Additional registration of the OCS shall be required where support spacing does not allow for proper wire placement above the track. Options include a pull-off to a single track, a pull-off to multiple tracks, multiple pull-offs to one track, or multiple pull-offs to multiple tracks. These methods may be used to achieve proper registration of the OCS where additional support is not required. Pull-offs shall be designed to allow for along-track movement of OCS conductors where applicable.

12.5.15.2 Backbones

Additional registration of the OCS shall be required where pole or registration point spacing does not allow for proper wire placement above the track. A backbone assembly shall be used to provide additional registration points in the absence of poles of other rigid structures. Backbones shall be used in conjunction with pull-offs to properly register the OCS conductors.

12.5.16 Disconnect Switches

Disconnect switches shall be equipped with provisions for padlocking. Pad-mounted switches shall be used wherever possible, except in cases where operations do not permit their use. The disconnect switch cabinets shall include individual disconnect switches for each OCS section. These cabinets shall be made of fiberglass material (non-metallic) and shall withstand local climate conditions. Additionally, grounding to the TPSS ground grid at the disconnect switch cabinets shall be provided for maintenance reference and safety.

12.5.17 OCS Tensioning

Auto-tensioned equipment shall use balance weights or UTA-approved auto-tension devices to maintain constant tension in the OCS conductors across a range of temperatures. If a balance weight system is employed, the assembly shall consist of a pulley system with a mechanical advantage of three, mounted to a pole or another

approved structure. Balance weights shall be made of cast iron, lead, or steel. In area of public access, the balance weights shall be suitably contained to mitigate tampering.

The designer shall ensure at all balance weight locations that there is sufficient travel for the balance weight to move throughout the temperature range specified for the OCS design. Balance weight anchor structures shall have limit stops at the high and low temperatures to prevent further balance weight movement. This effectively transforms the auto-tensioned system into a fixed termination system in terms of conductor tensioning.

12.5.18 OCS Grounding and Bonding

The OCS shall be properly grounded in accordance with NEC requirements. Generally, the footing resistance of individual structures shall be maintained at a maximum of 25 ohms. At feeder pole and/or surge arrestor pole locations, the footing resistance shall be a maximum of 5 ohms. A grounding stud shall be provided on the baseplate of each pole. To this stud, a ground jumper shall be mechanically bolted, which in turn shall be mechanically attached to a grounding plate embedded in the foundation concrete. The embedded grounding plate shall have a connection exothermically welded to the foundation reinforcement cage. At locations where minimum grounding resistance cannot be achieved, additional ground rods shall be connected to the grounding system as necessary to achieve the minimum grounding resistance. Connection to the pole shall be made using the grounding stud.

12.5.19 Surge Protection

Surge protection shall be provided at all feeder points on the OCS system. Surge arrestors shall be rated for a minimum of 1200 Vdc.

12.6 Negative Return Path and Stray Current Control

The rails shall be welded in continuous lengths, and bolted joints shall be electrically bonded. At locations requiring insulated joints, the traction power direct current continuity of negative rails shall be maintained through the use of impedance bonds. In areas of double track equipped with vital double-rail AC track circuits, cross bonding between tracks for negative traction current return equalization shall be accomplished by impedance-bond center-tap connections at each substation return feeder location. Consecutive impedance bonds shall not be used for either cross-bonding or substation return connections. In areas of trackage not equipped with track circuits, cross-bonding between tracks shall be accomplished by direct connections to both running rails.

Crossbond spacing shall not exceed 1,500 feet wherever possible. Impedance bonds shall be located outside of the rails, adjacent to the track.

Negative return, crossbonding, and bonding cables shall be enclosed within conduit or pull boxes up to the rail connection point to prevent theft where possible. All cabling shall be coordinated with train signals.

To minimize stray currents and to provide a means of monitoring such currents in the affected structures and utilities in the proximity of LRT facilities, the following provisions shall be made:

1. The mainline traction power system shall be isolated from the LRT yard. TPSSs shall be spaced at intervals such that the maximum track-to-earth potential does not exceed 50 volts. Consider locating substations close to passenger stations and track sections where high acceleration is anticipated.
2. Rails shall be insulated from direct contact with the ground by means of insulated pads and spikes, continuous rail-boot through at-grade roadway crossings, rail-boot for embedded trackwork, and proper clearance from the base of the rail to ballast.
3. Cross bonds shall be installed between rails at appropriate locations.
4. Test stations shall be established to enable measurements to be taken where deemed necessary.
5. Electrical continuity between the pole structure and foundation shall be maintained.
6. The mitigation measures listed above shall be coordinated with Chapter 16.

END OF CHAPTER 12.

DESIGN CRITERIA MANUAL

/ CHAPTER 13

TRAIN CONTROL

Table of Contents

CHAPTER 13 TRAIN CONTROL **1**

13.1 GENERAL (CRT) 1
13.1.1 Definitions 1
13.1.2 System Description 6
13.1.3 Systems Assurance 7
13.1.4 System Safety 8
13.1.5 Recommended Spare Parts List 8
13.1.6 Circuit Design Drawings 9
13.1.7 Technical Literature 9
13.1.8 As-In Service Drawings and Logic 10
13.1.9 Warranty and Initial Provisioning 11
13.1.10 System Interfaces 12
13.1.11 Functional Design Requirements 14
13.1.12 Signal Equipment and Technologies 24
13.1.13 Installation, Testing, Manuals, and Training 30
13.2 LRT AND STREETCAR SIGNAL SYSTEM 30
13.2.1 General (LRT and Streetcar) 30
13.2.2 Signal System Description 30
13.2.3 Interface Requirements 33
13.2.4 Site Work 34
13.2.5 Electrical Requirements for Signal Work 34
13.2.6 Functional Design Requirements 34
13.2.7 ABS Signal Block Design 38
13.2.8 Highway Rail Grade Crossing Warning 39
13.2.9 Interlocking Control 40
13.2.10 Yard 42
13.2.11 Signal Power 42
13.2.12 Signal Equipment and Technologies 43
13.2.13 Highway Crossing Warning Devices 45
13.2.14 Equipment Housings 45
13.2.15 Wire and Cable 46
13.2.16 Installation, Testing, Manuals, and Training 47

CHAPTER 13 TRAIN CONTROL

13.1 General (CRT)

This chapter outlines the functional design requirements, interface criteria, and general hardware technologies for the Utah Transit Authority Commuter Rail Transit (CRT) Signaling and Train Control System.

13.1.1 Definitions

The definitions of terms listed in this chapter and others incorporated by reference apply to similar terms wherever they are used in reference to the signal system. The terms train control and signaling can be used interchangeably throughout the document.

Advance of Signal–The area beyond a signal, as viewed from an approaching train governed by the signal.

Alarm–Any abnormal condition that requires the attention of an attendant or operator.

Applicable Standard(s)– References in these Specifications and drawings to standard designations of organizations and associations such as AREMA, IEEE, MUTCD, ASTM, ACI, AISC, and others, pertain to the latest revisions of Specifications, Codes, Standards, etc., as of the date of the Specifications. The Utah Transit Authority will not consider any claims of ignorance about the contents of cited standards since contractors are considered to be experienced and familiar with their trades' generally accepted, published standards of quality and workmanship.

Some common organization abbreviations are:

AAR	American Association of Railroads
ACI	American Concrete Institute
AISC	American Institute for Steel Construction
AISI	American Iron and Steel Institute
ANSI	American National Standards Institute
APTA	American Public Transportation Association
AREA	American Railway Engineering Association
AREMA	American Railway Engineering and Maintenance of Way Association
ASTM	American Society for Testing and Materials

AWS	American Welding Society
FRA	Federal Railroad Administration
CRSI	Concrete Reinforcing Steel Institute
NEC	National Electric Code
NEMA	National Electrical Manufacturers Association
NESC	National Electric Safety Code
NFPA	National Fire Protection Association
PTCSP	---Safety Plan
SSPC	Steel Structures Painting Council
UL	Underwriters' Laboratories
UDOT	Utah Department of Transportation
UTA	Utah Transit Authority

Automatic Train Control (ATC) – This term refers to the wayside and vehicle systems that provide ATO, ATP, and ATS, which automatically control train movement, enforce train safety, and direct train operation along with the subsystems of ATC.

Automatic Train Operation (ATO) – A subsystem of automatic train control, ATO governs train movements from start to stop.

Automatic Train Protection (ATP) – This subsystem within Automatic Train Control maintains safe train operations. If the appropriate operator response does not occur, this system initiates braking.

Automatic Train Stop – This term refers to a mechanical or electrical device on a train that interfaces with a wayside device to enforce a penalty brake application if the train operator fails to respond as required by the signal system.

Automatic Train Supervision (ATS) – The subsystem within Automatic Train Control, ATS monitors and provides requests necessary to direct the operation of a system of trains to maintain intended traffic patterns and minimize the effects of train delays on the operating schedule.

Block – This term refers to a length of track with defined limits, where train movements are governed by block signals, cab signals, and block limit signs where applicable.

Block Signal – A fixed wayside signal, operated either automatically or manually at the entrance to a block, governs the use of that block.

Braking Assurance – For the service brake application of non-penalty and penalty braking, a device monitors the deceleration rate of the train. If the value of this deceleration becomes less than a preset value, the system will then apply the train brakes in the emergency mode.

Braking Distance – This term refers to the distance needed to reduce a train speed to a reduced speed or stop, measured from the point the braking is initiated to the point the train reaches its desired speed.

Cab Signal – The speed command indicators located in the operator's compartment or cab, indicating a condition affecting the movement of a train and used in conjunction with interlocking signals and in conjunction with the car borne Automatic Train Protection system which will initiate braking when train overspeed is detected and alarm is initiated, and proper operator response does not occur.

Centralized Traffic Control (CTC) – Train traffic, absolute signals, and home signals controlled by a dispatcher to authorize train movements.

Crossover – Two turnouts, with track between the track frogs, arranged to form a continuous passage between two tracks.

Fail-Safe – Fail-safe engineering refers to the method where any single failure due to the opening of any single element of an electrical circuit, predictable and acceptable equipment failure, or accepted environmental conditions will not produce a result in the controlled apparatus that is less restrictive than would be otherwise affected.

Full Service Brake Application – An application of the brakes at a service rate until maximum brake force is developed.

Home Signal – A fixed signal governing the entrance to an interlocking.

Insulated Joint – A rail joint in which electrical insulation is provided between adjoining rails.

Instrument Housing – A walk-in type metal house used to house signal or grade crossing equipment along the right-of-way.

Interlocking – An interconnection of signals with corresponding track circuits and signal appliances such that their movement or operation shall succeed each other in a predetermined sequence, ensuring that signals cannot be displayed simultaneously on conflicting routes.

Interlocking Limits – The tracks between the opposing home signals of an interlocking.

Interlocking System Site – A site where one or more Interlockings, within close proximity, are controlled.

Intermediate Signal – A fixed signal indicating the condition on the next block.

Line of Sight – The operator shall be prepared to stop within the range of vision.

Locking – The electrical or mechanical establishment of a condition for a switch, interlocked route, speed limit, or automatic function which cannot be altered except by a prescribed and inviolate sequence of unlocking.

Manual Braking – Braking initiated by the train operator.

MTBF (mean time between failures) – This term is calculated by dividing operating time by the number of failures.

MTTR (mean time to restore) – This term is calculated by dividing the accumulated restore time by the number of failures.

Noise, Electrical – Interference brought about by undesirable random voltage or currents.

Non-penalty Braking – This refers to the braking initiated in response to a decrease in speed command by the ATP system, which happens when the train operator has acknowledged the command and applied the brakes within the prescribed time limit. Once the train speed has been reduced to match the ATP command, the operator may release the brakes.

Non-vital System – Non-vital systems perform functions of control, indication, communications, and related tasks that do not directly perform any logic or function affecting the safety of train movement and protection of life and property. They may or may not interface with vital systems.

Penalty Stop – This refers to a braking action initiated by the car-borne ATP equipment in scenarios where there's a decrease in speed command by the ATP or an overspeed situation on an existing ATP speed command, which the train operator failed to acknowledge and apply full service braking. The full service brake application will be maintained until the train speed is reduced to zero.

Positive Train Control (PTC) – As per the FRA Rail Safety Improvement Act of 2008 (RSIA), this term refers to systems installed on Class I railroad main lines designed to prevent train-to-train collisions, overspeed derailments, incursions into established work zones, and movements of trains through switches left in the wrong position.

Positive Train Control Safety Plan (PTCSP) – This is a comprehensive plan developed and implemented as part of the FRA's mandate for Positive Train Control systems. The plan outlines the procedures and protocols for safe operation, maintenance, and response measures in the event of malfunctions or emergencies involving the PTC system. This plan ensures the ongoing safety of train operations by proactively managing potential risks and hazards.

Route – A specified succession of one or more continuous blocks over which a signal governs movement of trains between two controlled interlocked signals.

Signal – This is a device that provides information governing train movements at a stationary wayside location, responding to dynamic information based on conditions affecting safe train movement ahead of that location.

Signal Indication – The information conveyed by the aspect of a signal or cab signal display.

Signal Aspect – This term describes the appearance of a signal that conveys an indication, as viewed either from the direction of an approaching train or on the cab signal display unit in the operator control compartment.

System Safety Program Plan (SSPP) – This is UTA's approved safety plan applicable to all rail projects.

Subsystem – This term refers to elements within a system that are interconnected to perform a specific function.

Switch-and-Lock Movement – This is a device that performs the sequential functions of unlocking, operating, and locking a track switch.

Switch (Electric) – This is a device that allows an electric circuit to be opened or closed.

Switch (Track) – This is a pair of switch points with their fasteners and operating rods that establish a route from one track to another.

Track Circuit – This is an arrangement of electrical and/or electronic equipment, including a length of the running rails, that allows for the detection of trains.

Train – This term refers to one or more locomotives and one or more cab cars or multiple coaches coupled together and operated from a single control compartment.

Train Detection Equipment – The track circuits and associated equipment used to detect the presence of trains.

Train Shunt Impedance – The electrical impedance between running rails where spanned by train wheels and axles.

Turnout – An arrangement of track switch and frog with closure rails that provides the means for rolling stock to be diverted from one track to another.

Unsafe Condition – This term refers to any condition that endangers human life or property.

Vital Circuit – This is any circuit directly affecting the safety of train operations as part of a vital system.

Vital System – Vital systems include all signal circuits; software and apparatus designed to directly perform a function to protect the safety of train movement and actively used to protect life and property.

13.1.2 System Description

The signal system shall encompass the functions of train detection, the establishment of movement authority for safe train separation, and the assurance of route security in signaled areas. This system shall also facilitate the operation of highway grade crossing warning systems and potential interfaces with highway traffic devices and the Union Pacific Railroad signal system. It shall provide a means for automatic and manual control of routes, along with the monitoring of train movement and system status.

The design includes all circuitry and software necessary to provide operation and indications from the field signal equipment required to perform these functions. This includes track switch-and-lock movements, wayside and cab signals, track circuits, interlocking logic, and other related devices to maintain the signal system's proper functioning. The system shall employ off-the-shelf, standard materials and components as extensively as possible to deliver the most cost-effective solution with the highest levels of reliability, maintainability, and safety performance. The hardware shall neither be obsolete or slated to become obsolete in the time of the product submittals. Moreover, the products used, to the greatest extent possible, shall be widely used in the industry. Unless otherwise stated, all aspects of the signal system shall be approved by the UTA Systems Engineer. The signal system hardware will interface with UTA's existing timer sync server in the back office, where feasible.

The Contractor shall immediately notify the UTA Systems Engineer of any requirements in these design criteria and the contract document that do not strictly adhere to applicable laws, ordinances, and rules governing the work before proceeding with that segment of the work. The Contractor's failure to do so shall be construed as an agreement on their part to guarantee compliance with the requirements for work covered by their Contract.

The Signal system shall provide for two distinct operating characteristics of signaled areas on the system:

1. A dedicated rail corridor that will primarily furnish UTA with a single-track system, station, and passing sidings, utilizing push-pull Commuter Rail rolling stock equipped with a continuous cab signaling system.
2. A corridor shared with freight rail carriers for daily industrial siding deliveries as well as emergency operations during non-revenue periods without cab signaling.

The system shall include an Operations Control Center (OCC) for Dispatcher monitoring and control. The OCC shall facilitate both unit lever and entrance-exit (N/X) routing, automatic and manual control of routes, monitoring of train movement, and system status. Controls and indications for track switch heaters, track block occupancies, track switch position, wayside signal status, grade crossing health status, and all existing UTA control and indicators shall be provided at the OCC.

The system shall be capable of normal operation and routing of trains for normal direction of travel without Dispatcher Control or intervention. All routes shall be selectable, by both a wayside process and from the OCC. The wayside process may include manual push buttons and automatic routing.

The system shall incorporate all connections to and from field components, the connection interface between these components, and the integration of all signal system-related equipment, including the interface with Union Pacific equipment.

CRT Train Control system and other auxiliary systems shall provide functions meeting the Positive Train Control requirements of 49 CFR Part 236, Subpart I, and UTA's current approved PTCSP.

13.1.3 Systems Assurance

Systems Assurance incorporates Reliability and Maintainability. A System Assurance Program shall be developed and implemented, based on the applicable recommendations of APTA, AREMA, and FRA, as guidelines. This program shall be employed to meet the project goals of UTA's System Safety Program Plan (SSPP).

The objective of the Systems Assurance Program is to utilize scientific and engineering principles to optimize the reliability and maintainability traits of the signal system within the CRT system environment. This includes eliminating critical and catastrophic hazards, ensuring high reliability, and minimizing downtime during maintenance and malfunctions.

The signal system design shall be fail-safe, meaning any safety-affecting malfunction shall cause the system to revert to a known safe state.

13.1.4 System Safety

The signal design shall prioritize safety first. A fail-safe design shall be achieved by employing the closed-loop principle on vital circuitry, protecting against open circuits, and short circuits. All such vital circuits shall comprise two-wire, double-break circuits whenever the relay controlled, and all portions of the control circuit are not within the same instrument housing.

All relays or solid-state equivalents energized by a vital circuit shall be vital units. Any contacts used within a vital circuit shall belong to vital relays.

All signal equipment, including relays, wires, cables, assemblies, and components, shall be identified by labels or tags for positive identification, as further specified.

13.1.5 Recommended Spare Parts List

The Contractor shall submit a recommended spare parts list tabulating all necessary replacement parts to maintain all of the equipment furnished on the project. This list shall separately identify parts needed for emergency repairs and those required for routine maintenance.

For parts not manufactured by the Contractor, the following information shall be provided:

- Name and Address of the Manufacturer
- Manufacturer's Part Number
- Contractor's Part Number

For non-standard items, submit reproducible copies of the Manufacturer's specifications.

All data submitted by the Contractor shall be reproducible in character and shall have a minimum size of 8½ inches by 11 inches.

13.1.6 Circuit Design Drawings

The Contractor shall furnish comprehensive, system-wide plans, which include Control Lines, Route and Aspect, and Single Line/Crossing Approach Plans. These plans shall show all termination points, relay coils and contacts, microprocessor vital and non-vital logic functions and equipment, controls, signal equipment, energy buses, and all interconnections and tie-in circuits to the existing signal system. It is the Contractor's responsibility to ensure that the completed signal system and signal circuit plans satisfy the safety and operation requirements stipulated in the Contract Documents.

Wiring and connection drawings shall detail all cable runs, termination points, and the wiring of all cases, racks, housings, and equipment. Relay contacts usage shall be displayed. Detailed wire routing within the case, rack, or housing shall be illustrated showing all connections and terminal points schematically according to the typical drawings approved by UTA.

Drawings showing the physical arrangement of wayside equipment housings and all associated OCC office equipment shall also be provided.

The Contractor shall supply Cutover Phasing Plans as part of the final design submission or at least 1 month prior to the scheduled cutover, and all necessary tie-in plans for each cutover phase as part of the final design submission. Provide two sets of approved plans with colors showing Red = In; and Yellow = Out. If additional revisions are needed, use Blue = In; Green = Out for Rev 2, and Orange = In; Brown = Out for Rev 3.

13.1.7 Technical Literature

The Contractor shall furnish six copies of the following types of technical literature, which includes:

- Maintenance manuals that encompass track circuit adjustment tables, operation of electric switch machines, vital processor operation, event recorder operation, transformers, automatic crossing gates, cantilevers, flashing lights, and other components requiring more than routine signal maintenance.
- Specifications, internal wiring plans, and parts lists for all products used in the project, if supplied by the manufacturer as a standard configuration
- Complete Bill of Materials
- All equipment operating values and specifications required by UTA to facilitate maintenance testing.

All literature shall be delivered bound, and in PDF electronic formats.

One copy shall be submitted during the shop drawing review cycle, with five more copies submitted at least 30 days before the first cutover. UTA reserves the right to reproduce all technical literature for its internal use.

13.1.8 As-In Service Drawings and Logic

The Contractor shall submit for approval detailed circuit plans, revised to reflect changes made during factory tests, to the UTA Systems Engineer to facilitate field construction and cutover testing. Contractor will provide for each location one physical IFC prior to contruction, which will be replaced once AIS has been approved

Final as-built drawings, corrected to show all changes made at any stage of construction, shall be placed in the appropriate wayside locations and submitted to the UTA Systems Engineer for approval within 30 days after the system cutover.

The issued for construction master set of prints kept at the job site shall be retained at the site for UTA until the permanent "As Built" drawings are delivered to the UTA Systems Engineer during the final inspection.

Upon project completion and prior to final acceptance, all drawings shall be delivered to the UTA Systems Engineer for UTA's permanent records. Drawing information shall be submitted via UTA's current project controls system.

All documentation prepared by the Contractor shall include, but not be limited to the following:

- Circuit Design Details
- Equipment Housing Layouts
- Vital and Non-Vital Relay and Equipment Rack Layouts
- Main Cable Terminal Board Layouts
- Terminal Assignments
- Apparatus Rack and Mounting Board Assignments
- Cable Routings and Installation Details
- Energy Loops and Relay Contact Assignments
- Switch Machine Layouts, Switch circuit controllers, Derails, and electrical locks
- Signal Power Details and Arrangement
- Local Control Panel Details and Arrangement
- Control Office Details, Arrangements and Software

- Grounding Details and Arrangement
- Event Recorder, if a standalone device
- Vital and Non-Vital Software, including all files and printed relay logic books
- Full Parts List, including part numbers, for lowest field replaceable unit
- Track Switch Heater System
- System Level Drawings
    - Cab Signal Control Line Drawings
    - Route and Aspect Drawings
    - Single Line Drawings with Grade Crossing Approaches
    - DAX Table Drawings
    - Cable Plan Drawings, TRAX only
    - Communication Plan Drawings
        - Fiber Allocation Table
        - System-Wide Communication Drawing

All Vital and Non-Vital logic files shall be submitted to UTA. Logic equations shall be presented in ladder-logic format and include a brief description of the equation function.

Following stick logic shall be installed at interlockings and shall remain in place where a switch is thrown within the interlocking.

13.1.9 Warranty and Initial Provisioning

The contractor shall provide a warranty for in-service equipment, which is mandatory for a specified period. This period should be 1 year following delivery, or after installation and acceptance testing. The exact duration of the warranty period shall be explicitly stated in the contract provisions.

Unless specified otherwise in the Contract Documents, the Contractor shall replace (furnish, deliver to the specified location, install or correct) at no additional cost due to material, design, or manufacturing defects, and/or poor workmanship.

During the development of both preliminary and final specifications, a clear maintenance philosophy shall be established, alongside the corresponding spares provisioning strategy. An allowance for the initial provisioning of spares shall be included, based on the contractor's recommendations. This approach ensures that adequate resources are available for maintaining the equipment in optimal working condition throughout its lifecycle.

13.1.10 System Interfaces

The signal system design shall ensure full integration with other systems. Key system interfaces include rolling stock, communications, highway traffic control systems, and civil engineering work such as station platforms, passing sidings, and grade crossings.

13.1.10.1 Commuter Rail Rolling Stock

The track circuits and wayside signal equipment shall be compatible with Electro-magnetic Interference (EMI) generated by CRT rolling stock. The vehicle parameters and performance specifications outlined in Chapter 11, 'Transit Vehicles,' shall be used to develop safe braking requirements and the signal block design.

Speed Enforcement–This function shall be facilitated through the onboard cab signal and ATP system, interfacing with the wayside cab signal system to trigger a penalty brake application, as detailed in UTA's current PTCSP.

13.1.10.2 OCC and SCADA Systems

Controls and indicators will be provided to the OCC. The OCC will have access to track switch heaters, track block occupancies, track switch machine positions, wayside signals, grade crossing health status, and all existing UTA controls and indicators. Additionally, it shall be a redundant network ring configuration to prevent single point failure.

13.1.10.3 Highway-Rail Crossing Warning Systems

The system encompasses numerous highway-grade crossings on tracks. Automatic highway-rail crossing warning devices and/or static warning signs, and/or traffic control devices shall be implemented in compliance with all applicable regulations, providing warning to street traffic at grade crossings. Interconnected circuits for grade crossing preemption shall be DC and shall not exceed 30 Volts. Refer to Chapter 10 'Traffic Control', for further details and descriptions.

Types of highway-rail at-grade crossings:

Public Roadway crossing–These crossings shall be equipped with automatic crossing warning devices. These crossings may require traffic signals at nearby intersections and preemption from the crossing warning system. Crossing warning system layout design will be determined on a site-specific basis by the traffic engineer, and the signal system shall implement all crossing warning equipment. All gated crossings near station stops shall be

designed and operated to meet all necessary timing requirements as prescribed by UTA and local oversight agencies. Train operators shall manually control acceleration, deceleration, train speed, and station dwell time.

Where all public roadway crossings are shared with the Union Pacific Railroad (UPRR), the UPRR will handle the design, construction, and maintenance of all UPRR crossing equipment. Meanwhile, UTA will oversee the design, construction, and maintenance of all UTA crossing warning equipment. UTA will also be responsible for all integration, interconnection, and testing between UPRR and UTA equipment. Interconnection is used between UTA and UPRR to activate all equipment, regardless of the train that triggers the crossing warning system.

Private Crossings–These crossings shall be provided with static signs as recommended by MUTCD. Unless mandated by the governing agency, automatic grade crossing warning devices will not be installed at these locations.

13.1.10.4 Civil Engineering (Track way)

Site-specific constraints shall be integrated with every location designed for signal equipment. This includes the effects of grades on train acceleration and deceleration, the impact of curves on sighting of wayside signals, and the effect of structures adjacent to the right-of-way. Where possible, the placement of signal locations and equipment shall facilitate easy maintenance. Wayside signals shall not be placed between the UTA track and the UPRR track and should be positioned away from any parallel railroad right-of-way.

13.1.10.5 Backbone Signal/Communications Duct Bank

An exclusive UTA signal and communication "backbone" conduit system (duct bank), consisting of four 1 ½-inch conduits, shall be provided along the entire length of the corridor. Conduits will be color-coded: red stripe on black, black, orange, and gray. Pull boxes will be placed at maximum intervals of 1,200 feet along the duct bank run or as designed in project drawings, and at each station.

The duct bank shall be located on UTA property along the entire corridor. Laterals, consisting of four 2-inch conduits, shall connect the duct bank to each power control cabinet at platforms and to all signal equipment housing and grade crossing locations, as well as other UTA facilities, as identified in the project plans and specifications. Additional conduit and pull boxes may be necessary at signal locations or stations, as indicated in project drawings.

13.1.11 Functional Design Requirements

The signaling system shall use the latest proven, off-the-shelf standard material and components to the greatest extent possible to provide the highest levels of reliability, maintainability, and safety performance. The system shall be compatible with all existing and proposed systems and shall consist of systems proven safe and reliable in the designed environment. All materials provided shall be new, except as may be indicated otherwise in the contract. These materials shall be manufactured, handled, tested, and installed to fulfill the conditions of the contract.

The signaling system shall be designed to be fail-safe. Any singular malfunction affecting safety shall cause the system to revert to a state known to be safe. The Contractor shall provide a valid assessment of the MTBF and MTTR capabilities of all equipment and subsystems furnished under the contract. At a minimum, this assessment shall include:

1. The furnishing of predicted design reliability.
2. The monitoring of equipment and subsystem reliability throughout the design, testing, and warranty periods.
3. Implementation of all corrective measures needed to achieve predicted reliability.

All circuits, or portions of circuits, required for the safety of train movements to protect life and property shall be considered vital. Systems that provide the interface to accept requests for control or provide indications to the dispatcher shall be non-vital. These non-vital systems shall interface with vital systems. Following control requests by non-vital systems, the vital systems will make vital decisions determining response and action.

Vital interlocking circuits shall utilize a microprocessor system and be designed using standard signaling techniques. These circuits shall be positive energy, single break within housings. All vital circuits exiting a housing shall be double wire, double break.

Non-vital circuits shall employ non-vital relay or solid-state technology. Failures of non-vital equipment shall not compromise the safety of the system.

Signal equipment shall be located along the track only where necessary. All other equipment shall be situated in signal bungalows of adequate size or on the rolling stock as required. Typical wayside equipment includes:

- Track circuit connections to rails (cables and bonding)
- Wayside interlocking signals (Appropriate height for the condition shall be approved by UTA)
- Wayside means for operator control at end-of-line interlockings if CTC communication fails.

- Track switch machines, electric locks, switch circuit controllers
- Track switch heaters
- Highway grade crossing warning devices

13.1.11.1 Cab Signal Block Layouts

All CRT train control and block design shall comply with the latest approved UTA Positive Train Control Safety Plan (PTCSP). The signal block layout shall utilize the minimum number of blocks necessary to meet headway requirements for the particular area. This layout shall not include signals for freight train movement or protection from their encroachment on the right-of-way, except at switches, derails, and electrically locked, hand-operated switches.

The block design shall be a cab signal-type system, absent of wayside signals, except for interlocking home signals. The system shall be designed so a train traveling at the reduced speed indicated by the cab signals will stop before an occupied block, stop aspect signal, or before reaching the fouling point of a reverse position switch without wayside signal protection.

Signal placement shall ensure a train stopped for a red aspect signal does not block a roadway at a grade crossing. Signals shall not be located within roadways or special track work.

In cases where the track civil speed is 79 mph, the maximum attainable speed shall be assumed as 81 mph (79 mph speed command plus 2 mph overspeed tolerance). In cases where the track civil speed is 15 mph, the maximum attainable speed shall be assumed as 15.5 mph (15 mph speed command plus 0.5 mph overspeed tolerance). All civil speed restrictions are comfort speeds and shall be accounted for and all speed commands shall be obeyed by all train operators. A manually controlled dwell time of 30 seconds for all station stops, excluding terminals, shall be accounted for.

Requirements for grade crossing operation activation shall be provided as part of the block design and signal systems.

The block layout shall be designed to provide cab signal indications, with maximum enforced speeds on the vehicle for each cab signal indication. The automatic train protection shall offer the following cab signal indications: 79, 59, 45, 30, and 15 mph. The overspeed protection shall ensure train movement safety in case of an operator's inadequate response to a more restrictive cab signal indication.

Block limits shall be determined by track civil speed constraints, placement of track switches and their governing interlocking signals, station platforms, and site constraints. Locations for all block limits and determination of available cab signal speed commands shall be based upon safe braking distance and headway requirements. The block designer shall verify that adequate braking distance is provided for all conditions requiring a stop from the maximum possible speed upon approaching such conditions.

Conditions requiring a stop aspect or zero-speed command include the following as a minimum:

- Occupancy of track block by a train, or other rail vehicle.
- Switch points not closed and locked in correct position.
- An independently operated fouling point derail, equipped with a switch circuit controller, not in derailing position.
- A failed or non-activated track circuit.
- Route in conflict, including traffic of the opposing direction, established with any aspect less restrictive than stop displayed, governing such conflicting movement.

All distance calculations to stop a train by means of automatic brake application using the automatic train protection system shall include the distance covered by the train during equipment recognition and delay times as defined by current regulations and standards.

13.1.11.2 Civil Speed Limits

Civil speed limits for curves shall apply to adjacent spirals. In the case of compound curves, the connecting spiral shall be assumed to have a civil speed limit equal to the lower of the civil speed limits of the two curves.

A Maximum Authorized Speed (MAS) of 79 mph is the highest train cab signal speed command that shall be transmitted for normal and reverse running.

The maximum cab signal indication, on diverging routes for turnouts and crossovers shall be as follows:

- Number 9 Turnout 15 mph
- Number 11 Turnout 15 mph
- Number 15 Turnout 30 mph
- Number 20 Turnout 45 mph
- Number 24 Turnout 60 mph

The worst-case train model shall be employed to enforce safe speed limits at turnouts, while the ideal train model shall be used to enforce train speed limits in civil speed restriction areas. See Section 13.1.16.7, 'Train Models,' for descriptions of worst-case and ideal trains.

When approaching a restrictive speed zone, the train speed shall be reduced, as indicated above, such that the front end of the train enters the speed restriction at a speed no greater than 2 mph above the restrictive speed limit. When leaving a restrictive speed zone for a more permissive zone, the rear end of an ideal train shall not accelerate to a speed 5 mph higher than the restrictive speed limit at the exit point of the restrictive speed zone.

13.1.11.3 Safe Speed Limits

1. The safe speed limit, where the civil speed limit is restricted by turnouts, shall be set equal to the civil speed limit of the given speed zone.
2. The safe speed limit shall not exceed 81 mph.

13.1.11.4 Safe Braking Distance

Safe braking distance is the minimum distance required to reduce the train to a target speed under worst case conditions. A safe braking model shall be developed.

The safe braking model shall comply with the current PTCSP, and as a minimum, include consideration of the following:

1. Location uncertainty of lead train (including roll-back tolerance).
2. Location uncertainty of following train.
3. Train length (All possible train lengths shall be calculated. Worst case train shall be used).
4. Allowable over speed permitted by the cab signal system
5. Maximum speed measurement error.
6. System reaction times and latencies (refer to latest project block design)
7. Maximum train acceleration rate possible at the time an over speed condition is detected by the system.
8. Worse-case reaction times to disable the propulsion system and apply the emergency brakes following detection of an overspeed condition by the system.
9. Penalty Full Service Brake rate.
10. Equated distance based on actual grade.

The penalty full service brake rate shall be the minimum brake rate achieved by a train under the range of environmental conditions and worse-case credible latent brake equipment failure modes, which can be anticipated

to exist for that train in the specific application. The worst-case train identified shall be used. The penalty full service brake rate shall be specified and include consideration of maximum passenger load (plus snow and ice load), minimum anticipated adhesion levels, and maximum design tailwind.

13.1.11.5 Train Resistance Factors

1. Track Geometry: Contractor shall use the Commuter Rail Design Criteria, (latest version), and civil design plans to establish all operational speeds throughout the entire system.
2. Vehicle: The characteristics of the vehicle shall conform to the specifications in Chapter 11, 'Transit Vehicles.'

13.1.11.6 Headway

The system shall be designed for operation headways of 15 minutes.The system shall be designed for an 8 minute same-direction signal headway. This headway does not represent achievable opposing-direction headways in single-track territory.The design headway shall be defined as the time interval required for a similar point of a following train to pass a fixed wayside location.

The system of block boundaries and train protection speed commands shall be designed for:

- Normal traffic direction with the minimum achievable headway using block boundaries established for the normal direction of traffic.

13.1.11.7 Train Models

1. The ideal train model shall be used to study and determine the design headway requirements for block design, as well as to simulate normal train operations. Ideal trains shall be assumed to have:
    a. Length: 1 locomotive, 3 coach cars and 1 cab car with the ability to expand to 9 coach cars and 1 cab in the future. The longest possible train length shall be used for the purpose of signal design headway study and the design.
2. The worst-case train model shall be used for determining safe braking distances and other required safety considerations. The contractor shall determine a worst-case train as per Section 13.1.11.4.

13.1.11.8 Signal Design Headway Requirements

1. Normal Direction:
    a. The block design shall allow two ideal trains to move in the normal direction of traffic, stop at each passenger station en route, and turn back at terminals at the design headway for each train

pair. Both trains shall operate in accordance with the design cab signal speed commands profile, not exceeding the MAS in each block.

b. For each train pair, the design headway shall be no less than 8 minutes. When operating at the design headway, each block shall transmit the same cab signal speed command to the second train that it transmitted to the first train, when the first train occupied that block.
c. In areas where the headway cannot be achieved at the design maximum authorized speed, an intermediate speed command shall be selected to meet the design headway requirements.
d. On single track alignment, a minimum 8 minute signal design headway shall be achieved in both directions for following trains.

13.1.11.9 Block Boundaries

1. Block boundaries shall be located to comply with safe braking distance and design headway criteria at the following locations:
    a. Each end of each station
    b. Interlocking limits
    c. Additional points as specified below
2. A block boundary shall be located in the normal direction of traffic in approach to a more restrictive speed zone. This boundary should allow a train to slow to the more restrictive speed when entering the zone and shall be no greater than the ideal train model braking distance to the civil speed limit of that zone.
3. A block boundary shall be located in the normal direction of traffic at the point of entry to a more permissive speed zone. The system shall include look-back capability such that when the track circuit behind the moving train in a more restrictive speed zone becomes unoccupied, the track circuits in the more permissive speed zone, provided the appropriate number of track circuits ahead are unoccupied, will transmit the more permissive train protection speed command to the train.
4. The block design shall not permit worst-case trains or ideal trains to run past an interlocking home signal displaying a stop aspect. Such a signal shall be treated as if there's an occupied block just ahead of the signal.

13.1.11.10 Cab Signal Speed Command and Logic

1. The speed command logic in each block shall be established to provide compliance with safe braking distance and design headway criteria.
2. (See 4 below) The speed command logic in the normal direction of traffic shall permit a train to close in to an interlocking signal at stop, within a safe braking distance at 15 mph.

3. Each block in the direction of traffic, at minimum, shall have cab signal speed commands for MAS and an intermediate speed, provided that there are enough speed commands available below MAS and there are enough blocks ahead. Additionally, each block shall have speed commands that permit the closing-in requirements specified above. Each speed command shall be transmitted to a train entering a block where the combined length of unoccupied blocks ahead is at least the safe braking distance from the leaving end of that block. Only the transmitter directly ahead of a train shall transmit a speed command.
4. Train cab signal speed commands shall not exceed the civil design speed limit.
5. Intermediate cab signal speed commands shall be selected to:
    a. Obtain the design headway where it is not obtainable at MAS.

Design a system to transmit cab signal speed command code to trains on running rail in either normal or reverse direction. The system shall apply cab signal to rail a maximum of one-track circuit in advance of the approaching train.

The system shall be designed to pre-energize cab signal speed command codes in cab code loops prior to the arrival of a train when the section of track that the loop is transmitting cab signal command code within is preceded by insulated joints.

The onboard cab signal system shall be compatible with the wayside signal system.

13.1.11.11 Train Performance Evaluation

1. Evaluate the performance of trains operating in the normal direction of traffic in response to the MAS, cab signal speed commands, and station stop, with specified station dwells.
2. Calculate the safe braking distance for each location of the simulated trains, considering the track and civil design characteristics, as well as the vehicle performance characteristics.
3. For each train pair, determine the theoretical minimum headway between two trains with the given velocity location profile, with the trains always separated by at least the safe braking distance.
4. Based on the theoretical minimum headway, quantify the minimum theoretical headway achievable by the block design for trains operating at the design cab signal speed profile. If during the design process, the theoretical signal design minimum headway of 8 minutes cannot be achieved with the maximum authorized speed, determine whether trains operating at reduced speeds can achieve the desired headway. If so, evaluate the performance of a train responding to these revised speed commands by determining safe braking distance and theoretical minimum headway as described above.

5. A separate study by UTA operation will provide the train operational simulation study. This study will consider other factors, including single-track sections used for both traffic directions, and determine the achievable operational headway throughout the corridor.

13.1.11.12 System and Traffic Control Logics

The vital interlocking system shall include a traffic control logic that will provide route protection for moves of conflicting direction. Traffic locking shall be effective to prevent changing the direction of traffic if any route is lined and locked to enter the traffic control logic area or any track circuit is occupied between the Interlockings governing the moves to that track. Vital timers may be use in accordance with UTA's PTC Safety plan.

13.1.11.13 Interlocking Systems

Interlockings shall comply with the requirements set forth in 49 C.F.R 236 Subpart C - Interlockings.

The location of interlocking signals and interlocking block limits are dictated by the location of track switches. Given that the location of these interlocking blocks is fixed, the block limits in approach to or in advance of such locations shall be determined relative to the location of interlocking blocks.

Approach locking or time locking, with a two-track release, shall be provided for routes approaching and traversing through Interlockings. No routes shall be cleared through an interlocking until the switches are locked in the correct position and vital traffic logics are free of conflicts. Route locking shall be provided to prevent the movement of a track switch or traffic change once a signal has been granted. This shall remain until an approaching train has covered sufficient distance and time to stop. Detector locking shall be deployed to inhibit the operation of a track switch where a train occupies the track circuit that encompasses the switch. Traffic direction shall be locked where any track circuit is occupied, a track switch is not closed and locked, or an electric lock is not secured, between the traffic locking limits. This shall also apply where a signal is cleared or a route is locked for advancement into the protected section, and the direction of traffic throughout any block while it is occupied, or while a route has been cleared into the block.

The local control panel, located inside the instrument house at each interlocking system site, shall control the signals and switches. It shall also facilitate unit lever routing, automatic and manual control of routes, as well as monitor train movement and system status. The local control panel's mode of control shall not operate concurrently with the automatic mode of route selection via track circuit occupancy at the same location.

Under normal train operation, normal routes shall be selected, and signals cleared automatically where track circuits detect train occupancy on the approach to the interlocking.

The aspects of the interlocking signals shall be determined based on the block design and cab signal conditions. The design of these aspects shall adhere to the current *UTA Front Runner System Specific Instruction (SSI)*.

13.1.11.14 Highway-Rail Grade Crossing Warning Systems

Highway grade crossing warning systems shall include all signs, operative warning devices (excluding highway traffic signals), and the logic required to activate these devices. These devices will interface with the signal system and highway traffic system to deliver essential warnings for safe highway traffic operation over at-grade crossings. At private grade crossings, either static signs or crossing warning devices shall be furnished as required by the field diagnostic review.

All grade crossing warning systems shall be designed in accordance with applicable laws and regulations and shall operate in a consistent, predictable manner. At UTA and UPRR shared grade crossings, warning system equipment shall interface with each other. UPRR will assume responsibility for the design, construction, and maintenance of all UPRR crossing equipment, while UTA will be accountable for the design, construction, and maintenance of all UTA crossing equipment, including the interconnection with UPRR equipment. The interconnection ensures the activation of all equipment, regardless of which train triggers the system.

The warning devices required shall be determined on a site-specific basis as determined from a field diagnostic review. The typical grade crossing will be provided with flashing light units, automatic gates, crossing sign and bells, unless a unique site requires special consideration. Preemption of highway traffic signals shall be provided as necessary on a site-specific basis. Preemption logic shall account for a second train on the approach before the first train move has recovered the crossing – after the passage of a train, the logic should not clear the crossing if the preemption relay is still active.

Approach circuits for CRT highway crossing warning devices shall be designed to provide a minimum warning time of 25 seconds (a 20-second FRA minimum warning time plus a 5-second UTA buffer time) at maximum authorized speed. Where relevant, the UTA crossing controller shall communicate with the adjacent UPRR crossing equipment via an interface cable.

If the track clearance distance exceeds 35 feet, one second shall be added to the minimum 25-second warning time for every 10 feet (or fraction thereof) beyond 35 feet. Clearance distance shall be measured in both directions, and the larger distance shall be used in the calculations.

The circuits shall be designed to maintain the crossing warning until the last car has passed a predetermined distance beyond the edge of the highway crossing. This distance shall be calculated separately for each grade crossing.

Grade crossings located immediately after a station platform shall be equipped with circuitry, such as a grade crossing predictor, to prevent unnecessary operation of grade crossing warnings and traffic control devices. This may include a start or restart circuit as the train begins to advance from the station to the crossing. Data recorders for highway crossing shall be furnished.

Grade crossing warning times shall comply with the maximum cab signal rate defined within the crossing approach.

13.1.11.15 Yard

No signal system shall be installed within the CRT yard. All train movements within the yard shall be executed at restricted speeds not exceeding 10 mph. Hand-throw switch machines shall be provided in the yard.

Dispatcher control from OCC shall govern train movement entering the mainline track from the yard. This may include a holding signal, or integration as part of the advanced interlocking.

The signals exiting the mainline track shall regulate train movement from the mainline track to the yard lead and vice versa. Routes shall be automatically aligned or governed by dispatcher control from OCC.

13.1.11.16 Track Switches

All track switches within signaled territories shall interface with the signal system. Every mainline powered switch shall be interlocked, with full route security ensured by the Interlocking logic. For all hand-thrown switches on signaled track, electric locks shall be provided. Electric lock timer values shall be specified in the plans and displayed on the electric lock device.

Electric locks on hand-thrown switches shall be released in three manners:

1. Exiting from the mainline track–This release shall be automatic, triggered by track circuits designed to detect the train move, and the removal of the electric lock padlock.
2. Entering the main track–This release shall be automatic and initiated by the removal of the electric lock padlock. The signal system shall protect all conflicting train moves onto the mainline track.

3. Entry or exit–A timer shall be provided to indicate that a safe period has transpired following removal of the electric lock padlock to provide a release when normal automatic release fails to function. Removal of the electric lock padlock will place all signals approaching the switch to Stop and will begin the time sequence.

13.1.11.17 Utility Power

Normal 60 Hz utility power will supply the signal system, grade crossing warning system, and electric switch heaters, if applicable. UTA will facilitate all utility connections related to the signal system or any of its components. The contractor shall provide UTA with the electrical requirements, specifications, and schedules for each piece of equipment pertaining to the signal system, grade crossing warning system, switch machines, electric switch heaters, or any other item.

13.1.11.18 Electromagnetic Interference (EMI)

The signal system design shall ensure functionality within the electromagnetic environment of the CRT system while minimizing interference with other systems. The equipment's design, selection, and installation shall consider the electromagnetic environment, which includes adjacent AC power distribution systems, vehicle propulsion systems, communications systems, neighboring railroads, industrial facilities, and electric utility lines. The contractor shall perform and provide an EMI analysis for the entire project and develop a corresponding plan. This plan shall evaluate typical vehicle emissions and their potential impact on the vehicles' reliable and safe operation over the proposed signal system.

All portions of the signal system and its components shall be designed to operate in the electromagnetic environment that will exist in the vicinity at the time of construction. No portion of the signal system shall suffer from, or contribute to, harmful electromagnetic interference, whether conducted, radiated, or induced.

13.1.12 Signal Equipment and Technologies

The system shall utilize off-the-shelf, standard materials and components to the maximum extent feasible to ensure the lowest cost and highest levels of reliability, maintainability, and safety performance, including all components used therein. The delivery of materials and equipment to the site shall be planned such that there is no delay in the progress of overall project work. There shall not be an accumulation of material that is not scheduled to be used within a reasonable time.

All equipment employed shall be standard products manufactured by entities regularly involved in the production of such equipment or material and shall adhere to all applicable codes and standards. The hardware shall not be obsolete or slated to become obsolete at the time of the product submittals. The products furnished, to the greatest extent possible, shall be widely used in the industry. Assemblies and components used for identical functions within the system shall be mechanically and electrically interchangeable. Standard commercially available equipment and material from multiple sources shall be utilized wherever practicable.

The contractor shall be responsible for design, manufacture, and installation of all car-borne cab signals and wayside equipment and technology. The contractor shall provide the specifications for the necessary space and suitable technology interfaces.

The contractor shall be accountable for all documentation related to installation, maintenance, testing, and fault logging.

13.1.12.1 Track Circuits and Train Detection

All track circuit equipment used for train detection shall maintain a shunting sensitivity and ballast resistance as specified by the appropriate regulations. In no event shall a momentary loss of shunt impact the block or cab signaling system. The track circuit shall consistently shunt correctly with the appropriate shunt applied at any point within the track circuit.

Broken rail indication shall be included and designed such that they meet all requirements and standards. The track circuits and train detection shall be immune to interference from high tension and high current commercial utility transmission lines that run adjacent or parallel to the tracks.

13.1.12.2 Track Switch Machine

Track switch machines shall be categorized into the following types:

1. Dual control (power and manual), high-speed switch and lock movements–These shall be employed in all track switches for CRT operation in signaled territory.
2. Hand-operated switch machines–These shall be implemented at mainline track to railroad siding track switches and shall be combined with electric locks, switch circuit controllers, and facing point lock protection in signaled areas. Electric switch locks shall be low-profile type. The unlocking device shall operate on a low voltage dc power supply. The signal system at the siding location shall interface with the circuit controller installed at the siding derail if any opportunity to store a vehicle on the siding track exists.

3. Hand-operated yard switch machine—These shall be used in the yard with manual operation and shall be trailable switch machines with switch position indicators.

13.1.12.3 Wayside Signals

Wayside signals shall be of the color-light type and shall include lenses that ensure clear close-up observation and high long-range visibility for the train operator.

Each signal layout shall encompass the necessary apparatus for installing a complete signal, including color-light signals, masts with their corresponding heights, bases, foundations, junction boxes, terminals, conduit, cable and wire, electrical fittings, and other essential hardware required for installation at the signal location.

Signal lighting may be powered by either AC or DC and may be driven by a vital microprocessor or by relay contacts.

13.1.12.4 Track Switch Heaters

Track switch heaters shall be supplied and installed at each powered track switch on UTA's alignment. Hand-operated track switches shall be exempt from requiring track switch heaters.

The track switch heaters' rating shall be sufficient to ensure uninterrupted track switch operation under the environmental conditions of snow and ice.

Track switch heaters may employ either an electric heating element or a combustion burner design, with a preference for natural gas-powered forced air.

The most current UTA-approved track switch heater duct cover system shall be furnished at each track switch heater location.

13.1.12.5 Equipment Housings and Foundations

Signal masts shall be approved by UTA and installed on pre-cast or cast in place concrete foundations. All signal equipment structures shall adhere to the AREMA recommendations for similar structures. Signal equipment houses and cases may be placed on standard pre-cast concrete pads or piers and shall be level and plumb.

Signal instrument housings shall be furnished with air conditioners, heaters, and ventilator fans as required to maintain the operating environment necessary for protecting the signal equipment. All openings of instrument houses and cases shall be screened or sealed as much as practical to prevent entry of animals and insects.

Sufficient sealing compound shall be provided to seal all entryways following the installation of cables and wiring. Signal housings shall be built of approved aluminum or powdered coated steel. The contractor shall determine the size of each equipment housing to adequately house all equipment and provide spare space for maintainers. Each equipment house shall have a cable tray system. Doors shall be gasketed to provide a weatherproof seal, hinged, and secured with handles and clasps providing a three-point locking device. Each equipment house shall have an external standby power generator receptacle with standby power transfer interlock for the electrical service distribution panel.

Each equipment housing shall be fitted with an HVAC system capable of maintaining a temperature not more than 10 degrees above the outside air temperature. Louvered intake vents, exhaust fans and associated louvers shall be arranged to prevent water from entering. Intake vents shall be equipped with dust filters.

Floors and shelving within all instrument houses and cases shall be covered with ribbed, rubber matting. Each house shall be fitted with both interior and exterior lighting and convenience outlets.

Insulation material, of the highest R-value available (minimum R 10), shall line the interior of instrument house walls, doors, and roofs to a thickness of two inches. The material shall be flame retardant and non-electrically conductive and shall be installed to avoid introducing any hazard.

Cable entry to each equipment housing shall be facilitated by either conduit or galvanized pipe, connected to the housing in a way that ensures no cable is exposed. Sufficient conduit or pipe shall be provided to ensure that 10% of cross-sectional area is not in use.

Racks shall be used within instrument housing for mounting of all relays, equipment, test and maintenance panels and other items designed for rack mounting.

All new equipment housings and the equipment within these housings shall be tested in the factory according to the approved factory test procedure.

Setbacks for equipment housings from the centerline of the near track shall be a minimum of 8 feet 6 inches to the closest face of equipment housings per Utah State General Order 66. Signal and grade crossing warning

equipment locations shall also be analyzed and located in such a manner that they do not interfere with pedestrian, vehicular, or train operator line-of-sight

13.1.12.6 Signal Power

240/120 Vac, single-phase, 60 Hz power shall be provided for distribution at all instrument houses and cases for operation of signaling, grade crossing warning, and non-signaling auxiliary equipment. The signal power distribution system and the associated hardware, including step-down transformers, shall be included in the design. The signal system design shall determine load requirements and coordinate with the systems design.

Signal power shall be used for power supply, battery charging, signal lighting, track circuits, and electric switch machine operation. Where signal power is used for a purpose other than signaling, transformers shall be interposed into the circuit to prevent a ground from affecting the signal system. No batteries shall be provided for electric switch machine operation.

Battery backup with a minimum of 8 hours of standby power shall be provided at highway grade crossing locations, including approach track circuit locations and wayside signal locations.

Surge arresters shall be used for track circuits, solid state equipment and other devices, where determined necessary to protect against damage caused by lightning and electrical transients. All track circuits shall be fused with UTA approved Form 101 high speed fuses.

13.1.12.7 Interlocking Local Control Panel

A local control panel shall be provided at each interlocking system equipment house to provide a means for local operation to override automatic operation and for testing purposes. The panel shall visually represent the interlocking, adjacent tracks, and signal functions, maintaining a geographical relationship with the physical track layout.

Circuitry or logic necessary for discerning the required switch machine and signal operation due to manual intervention, whether local or remote, shall reside within non-vital relays or non-vital microprocessor software.

All indication circuits shall be non-vital in purpose and shall not be wired using vital circuits. Indication circuits shall not require vital relays to perform their function. However, they may utilize contacts within vital relays.

13.1.12.8 Miscellaneous Equipment

All running rail bonding shall be rail-head type bonds, using a thermit-type weld attachment where joint bars are in use.

Fuses or circuit breakers shall protect the various pieces of signal apparatus from the effects of short circuits or overload, in accordance with the manufacturer's equipment requirements.

Data recorders shall be provided for each interlocking and each grade crossing warning location to monitor all functions. This shall include track circuits, cab signal speed code, switch machine correspondence, signal control, stop signal checks, track blocking functions grade crossing approach track circuits, and status of grade crossing warning devices. Data recorders shall be solid state devices.

13.1.12.9 Maintainability Design Requirements

All test points, indications and components requiring adjustment or replacement shall be visible and accessible while mounted in their normal position, without disassembly of other components.

Each signal battery bank shall feature a mechanism to isolate the battery bank from the battery charging rectifier, enabling battery cell replacement without the disruption of wiring or the removal of power from the signal battery bus.

All equipment shall include test points for remote diagnostics, event log downloading, software downloading, and the verification of essential voltages and waveforms. Each test point, clearly labeled and designed to accommodate standard equipment probes and connectors, such as voltmeters, oscilloscopes, and industry-standard laptop equipment, shall be placed wherever necessary for troubleshooting and routine maintenance. Accessible points for signal injection during testing shall also be provided.

Built-in indicators or meters shall be provided as necessary where frequent observations or adjustments are necessary. All electronic modules shall be equipped with LEDs or other approved indicators. They shall, at a minimum, demonstrate that each function of the module is performing correctly. All indicators shall be labeled. As an alternate, electronic modules may be equipped with a receptacle to permit observation of equipment with a portable plug-in diagnostic unit in place of LED indicators.

13.1.13 Installation, Testing, Manuals, and Training

13.1.13.1 Installation

The installation of signal equipment shall conform to the relevant sections of the AREMA Signal Manual and/or manufacturer's recommended methods. Staged construction shall follow the guidelines indicated in the integrated construction schedule.

13.1.13.2 Testing

All signal components, subsystems, and systems shall be subject to the applicable factory tests, field tests, and inspections to verify design, nameplate rating, and to ensuring proper performance, safety, reliability, and compliance with specifications. Test procedures and inspections shall generally be conducted in accordance with manufacturer's specifications and comply with FRA requirements and the AREMA Signal Manual where applicable.

13.1.13.3 Training

Training programs shall equip UTA personnel with comprehensive knowledge of operations and maintenance associated with the signal system. Technical manuals shall extensively cover all aspects of signal system operations, maintenance, repair, and spare parts provisioning.

13.2 LRT and Streetcar Signal System

13.2.1 General (LRT and Streetcar)

This chapter describes the functional design requirements, the interface criteria with related work, and the hardware technologies chosen for the LRT and Streetcar signal systems.

13.2.2 Signal System Description

13.2.2.1 General Description

Light rail and Streetcar vehicles shall either operate within a dedicated right-of-way or share the street traffic. In dedicated corridors, LRT and freight vehicles may use the same track but shall be time separated. Therefore, the signal system in the joint-use sections shall be designed to accommodate both LRT and freight vehicles, operating speeds and conditions. The dedicated portions of the right-of-way shall employ automatic block signaling (ABS)

fixed-color light signals to ensure safe train separation and braking distance. In locations where the track shares streets with automobiles and where railroad-type signals are not provided, LRT and Streetcar bar position signals shall govern.

The signal system shall primarily use off-the-shelf, standard materials and components to ensure cost-effectiveness, high reliability, maintainability, and safety performance. The system shall be based on an automatic block system compatible with LRT and freight operations, communications systems, traction electrification systems, transit vehicles, and the EMI environment. All track segments in dedicated corridors shall be designated and signaled for normal-directional running with the capability for bi-directional running, such as in single-track segments. Bi-directional signaling shall be designed to provide full traffic locking between opposing home signals, initiated by the selection or request of the initial route direction and performing a block check to the opposing home signals. Traffic shall remain locked in this direction until all rail vehicles have completed their movement and exited the full length of blocks between the opposing home signals.

13.2.2.2 Signal System Feature Highlights

Impedance bonds, with a 1,500-amp capacity, shall be installed at block boundaries to provide propulsion return current continuity. They shall be tuned or provided sufficient impedance at 60, 100, 156 hertz to be compatible with signal train detection circuits and coded track circuit systems. Protection against vandalism or theft shall be provided for the impedance bonding connections to the rail. The transmission of signal logic and control shall be via the rails and/or over wayside cables or fiber optic communications network. Normal routes through interlockings shall be aligned and cleared automatically or manually via OCC supervisory control, the interlocking local control panel, or wayside pushbuttons. Non-revenue routes shall be selected exclusively by OCC supervisory control or the interlocking local control panel.

Switch machines at mainline turnouts/crossovers and at terminal ends for LRT and Streetcar operations shall be controlled by electric power.

In contrast, switch machines at turnouts to freight sidings and branch lines shall be hand-operated and equipped with controlled electric locks as required per FRA part 236, along with facing point locking, switch point detector, and derail protection in the siding track to prevent unauthorized mainline access.

Manually operated spring switches shall be installed at locations specified by UTA, and they shall be equipped with switch point detection and circuit controllers to detect the switch position.

13.2.2.3 Safety and Systems Assurance

During the signal system's design and installation, a Systems Assurance Program shall be implemented to fulfill the objectives of system safety. Scientific and engineering principles shall be employed to identify and analyze potential hazards, aiming to eliminate, control, or minimize these hazards.

The signaling system shall be designed with a fail-safe philosophy; meaning, any malfunction that impacts safety shall revert the system to a condition known to be safe.

13.2.2.4 Electromagnetic Compatibility

The signal system shall be designed to function in the electromagnetic environment of the UTA system, while causing the minimum possible interference with other systems. The equipment selection, design, and installation shall be carried out considering the electromagnetic environment, which includes the traction power supply, AC power distribution systems, vehicle propulsion systems, communications systems, adjacent railroads, industrial facilities, and electric utility lines. Prior to implementation of electronic or coded track circuits, the contractor shall perform a live demonstration to ensure compatibility with UTA's light rail and Streetcar vehicles and operation environments. A detailed analysis of the train detection system relating to vehicle EMI compatibility shall be performed by the contractor and submitted to UTA for approval. At the Engineer's discretion, prior UTA operational history or certification may be submitted in lieu of the provisions stated above.

Track circuits shall be compatible with EMI generated by the UTA LRV and Streetcars and wayside control technology.

13.2.2.5 Circuit Design

Vital interlocking circuits shall be designed using standard signaling techniques. Where utilized, line circuits shall be double wire, double break. Vital circuits shall utilize vital microprocessor interlockings and vital relays per recommendations of the AREMA Signal Manual.

Non-vital circuits shall employ non-vital relay or solid-state technology. Failures of non-vital equipment shall not affect the safety of the system.

13.2.3 Interface Requirements

The signal system design shall ensure full interface compatibility with other UTA systems and city traffic controller systems. The fundamental interfaces identified are vehicles, traction power, traffic control and LRT and Streetcar signal priority systems, tracks, catenary structures, and civil work.

13.2.3.1 Traction Power Negative Return

Impedance bonds shall be installed at track circuit boundaries for traction power current negative return, including return to Traction Power Substation. Cross bonding at the selected impedance bonds shall be coordinated between signal and traction power final designers to assure that adequate cross bonds are provided for traction power return without compromising track circuit integrity. In street-running operation where train detection circuits are necessary, single rail track circuits may be used without impedance bonds at track circuit boundary. The use of single rail track circuits requires coordination of traction power negative return studies.

13.2.3.2 Traffic Control and LRT and Streetcar Signal Priority System

The Traffic Control and LRT and Streetcar Signal Priority System aim to ensure LRV and Streetcar progression while maintaining balanced cross-street traffic. This system comprises the intersection traffic signal controller, LRT and Streetcar priority system, LRT and Streetcar detection system, LRT and Streetcar traffic bar signals, and traffic/LRT and Streetcar signal timing plans. In some regions, the LRT and Streetcar priority function will be managed solely by the intersection traffic controller. In selected areas, the traffic signal controllers will also integrate into the owning agency's Advanced Traffic Management System (ATMS), which provides centralized LRT and Streetcar traffic management.

The LRT and Streetcar signal system shall interface with intersection traffic signal controllers where traffic signal preemption is required at grade crossings and in special cases requiring an interface between LRT and Streetcar equipment housing and the traffic controller.

13.2.3.3 Catenary Structures

Catenary structure clearance requirements shall be incorporated into signals system and highway crossing warnings layout designs. Signal equipment sites shall be selected to avoid interference with catenary structures. Coordination during design will be required between appropriate designers.

13.2.3.4 Civil Work

Wayside signal equipment installation shall depend on civil constraints such as right-of-way limits, visual obstructions, highway crossing physical dimensions and track clearances.

Track grade and curvature effects and other civil restrictions shall be incorporated into the signal block design.

Setbacks for equipment housings from the centerline of the near track shall be a minimum of 8 feet 6 inches to the closest face of equipment housings per Utah State General Order 66. Signal and grade crossing warning equipment locations shall also be analyzed and located in such a manner that they do not interfere with pedestrian, vehicular, or train operator line-of-sight.

13.2.4 Site Work

13.2.4.1 Concrete

Signal equipment houses, cases, signals, and highway crossing automatic gates and flasher signals shall be installed on concrete foundations following AREMA recommendations.

13.2.5 Electrical Requirements for Signal Work

General electrical requirements for signal work shall be based on the NEC and industry practices as appropriate for the cities and counties where the system will be constructed.

13.2.6 Functional Design Requirements

13.2.6.1 General

The signaling system shall provide the functions of train detection, broken rail detection, signaling for safe train separation, route security through interlockings, and grade crossing warnings on all portions of the track except for the yard, yard leads, the downtown segment, and other street-running territories. In street-running territories, LRT and Streetcar traffic bar signals shall govern. The signaling system shall be designed to be fail-safe, meaning that any malfunction affecting safety shall cause the system to revert to a state known to be safe. Train operators shall manually control acceleration, deceleration, train speed, door operation, and station dwell time.

Signal control equipment is to be located along the track only where necessary. All other equipment shall be located in signal equipment houses or cases.

Apparatus typically located along the tracks include:

- Track circuit equipment (impedance bonds and track bonding)
- Fixed wayside signals
- Wayside pushbuttons
- Track switch machines, electric locks, and circuit controllers
- Track switch heaters
- Signs or other wayside indication equipment
- Highway rail grade crossing warning equipment

Apparatus located in signal equipment housings include:

- Signaling logic circuitry
- Highway rail grade crossing warning circuitry
- Track circuit equipment
- Signal lighting circuit equipment
- Switch machine and electric lock circuit equipment
- Power equipment

13.2.6.2 Double Track Territory

The automatic block signaling system (ABS) in double track territory, other than in street-running conditions, shall be arranged to allow for the track to be signaled in normal direction. Reverse running shall be under manual block signaling between interlockings but controlled by the home signal. That is, in double track sections a route can be manually selected in the reverse direction from a home signal. The home signal will perform a block check to the next home signal. Fixed color light LED wayside signals shall be located at block limits for signaling.

Automatic block signaling, as described above, shall not be permitted in any street-running territories. Instead, the LRVs and Streetcars shall be governed by LRT and Streetcar traffic bar position signals, which are controlled by the traffic control system and may be integrated into the Advanced Traffic Management System.

13.2.6.3 Single Track Territory

The signal system in single-track territory shall be an automatic signal signaling (ABS) system, arranged for track signaled in both directions.

Where the single-track area is occupied by a train, approach clearing to a home signal shall not be implemented for following trains for movements from double-track territory into single-track territory. The following moves signal shall be initiated by OCC or using wayside pushbuttons under OCC radio supervisory direction.

Signal equipment housing sizes in single-track areas shall be designed to accommodate future upgrades to double-track operations.

13.2.6.4 Freight train operation

Freight train operation in UTA LRT shared segments will be controlled by the OCC.

13.2.6.5 Interlocking and ABS Signal Aspects

Table 13-1: Three Aspect Interlocking Home Signal

Aspect	Indication
Green	Proceed straight move or normal direction running at maximum authorized speed, next two blocks are clear
Flashing Green	Proceed diverging move, next two blocks are clear; or proceed diverging move off mainline
Yellow	Proceed straight or diverge move, prepared to stop at next signal
Red	Stop
Flashing Red	Stop, Proceed only under Dispatcher direction

Table 13-2: Three Aspect ABS Intermediate Signal

Aspect	Indication
Green	Proceed at maximum authorized speed, next two blocks are clear
Flashing Green	Not applicable
Yellow	Proceed and prepared to stop at next signal
Red	Stop, block in advance of the signal is not clear
Flashing Red	Stop, Proceed only under Dispatcher direction

Note: If there is more than one turnout being controlled by one home signal, switch point indicators shall be used at track switches inside the interlocking.

13.2.6.6 Central Business District (CBD) and Other Street-Running Territory

13.2.6.7 LRT and Streetcar traffic bar signal

Railroad type signals shall not be used in street-running territories. Train detection for preemption or synchronization of motor traffic control devices shall be provided as required by traffic engineering. An interface junction box shall be provided for the tie-in to traffic signal control equipment. At points where trains intersect with traffic lanes, LRT and Streetcar traffic bar signals shall be employed. These signals will permit the train to cross automobile traffic lanes while displaying red traffic signal lights to the automobiles.

The LRT and Streetcar traffic bar signals aspects at street intersections for the street-running territories are as follows:

- Vertical bar (white): LRT and Streetcar traffic proceed.
- Diagonal bar (white)–LRT and Streetcar traffic proceed for turning move at route change point.
- Horizontal bar (white)–LRT and Streetcar traffic do not proceed.

13.2.6.8 LRT and Streetcar route bar signal

The signal system shall provide routing control equipment, such as trailable power switch machines, track circuits, route selector panels, and LRT and Streetcar route bar signals, at track turnouts or crossovers in street-running territories. Route selection shall be accomplished by setting up default (preferred) routes, which are activated by approach track circuits, or by using a route selector panel to cancel the current route and set up the desired route. Route selector panels are typically placed adjacent to the LRT and Streetcar route bar signal in the approach of the track switch or on a station platform in advance of the track switch. The route selector panel typically contains buttons for:

- Cancel route
- Select normal route
- Select reverse route

The LRT and Streetcar route bar signal aspects for turnouts and crossovers in street-running territories are as follows:

- Vertical bar (amber)–Route is lined for straight move.
- Diagonal bar (amber)–Route is lined for diverging move.

- Horizontal bar (red)–Do not proceed. Stop.

13.2.7 ABS Signal Block Design

13.2.7.1 General Block Design Criteria

For determining block limit locations, utilize the minimum average service braking rate based on standard deceleration requirments or verified vehicle data, derated by 30%. This rate shall serve as the safe braking rate for safe braking distance calculation. There shall always be sufficient safe braking distance in the approach to an occupied block or a red interlocking signal to bring a train to a stop before entering that block. The distance from signal to signal shall be longer than the safe braking distance calculated at the maximum authorized speed at the entrance signal, using the safe braking rate. In addition, a 30% safety margin shall be added to the above braking distance calculation.

The maximum speed of freight train in UTA LRT shared segment will be limited to 25 mph.

The ABS signal block design shall consider both LRT and freight train, and use the longer safe braking distance of LRT and freight train for each signal location for ABS signaling.

The location of interlocking signals and interlocking block limits are dictated by the location of track switches. Since the location of these interlocking blocks is fixed, the block limits in approach to or in advance of such locations shall be determined relative to the location of interlocking blocks.

13.2.7.2 Signal Block Design Headway Criteria

Double track alignment shall use the minimum number of blocks necessary to achieve a minimum 6.6-minute design headway (for an operational headway of 10 minutes) in the normal direction of traffic at the maximum attainable speeds constrained by civil speed limits.

On single track alignment, a minimum 6.6-minute design headway (for an operational headway of 10 minutes) shall be achieved in both directions for following trains.

Possible locations for block limits and ABS signals include:

- Stations ends
- Interlocking limits
- Intermediate locations

13.2.8 Highway Rail Grade Crossing Warning

13.2.8.1 General Criteria

Highway grade crossing warning systems shall meet requirements of MUTCD Part 8 – Traffic Control for Railroad and Light Rail Transit Grade Crossings, and as recommended in AREMA Signal Manual Section 3 – Highway-Rail Grade Crossing Warning Systems. These systems shall include all signs, signals, markings, and warning devices, with their supports. Their function is to enable safe and efficient operation of light rail, Streetcar, freight rail, and highway and pedestrian traffic over grade crossings.

All highway-rail grade crossing warning systems shall be designed in accordance with federal, state, and local laws and regulations.

The grade crossing warning system shall utilize overlay track circuits to activate grade crossing warning devices such as flashing lights, automatic gates, and a bell at public road crossings. Grade crossing warning signs or devices shall be used at selected private road crossings as required by a traffic engineering study. Grade crossing warning shall be designed for both directions of train traffic on each track. Where interlocking limits are within the approach of a crossing, the crossing control device shall be activated by the interlocking control, and the gate-down indication shall be part of the home signal control logic. Grade crossing island circuits shall remain absolute. MAS for trains shall be used in approach timing and circuit design for normal direction running or bi-directional signal territory. For reverse direction running, a maximum of 35 mph LRT and Streetcar train speed shall be used.

13.2.8.2 Specific Guidelines for Grade Crossing Warning Systems

Approach circuits for highway crossing warning devices shall be designed on the basis of 25 seconds at track speed. Where track clearing distance exceeds 35 feet, 1 second shall be added to the warning time of 25 seconds for every 10 feet (or fraction thereof) over 35 feet. Clearance distance shall be measured in each direction on highway traffic and the longer distance used in the calculations. The approach circuit distance shall not be less than 440 feet.

The LRT and Streetcar signal system shall interface with intersection traffic signal controller where traffic signal preemption is required at grade crossings and in special cases requiring interface between LRT and Streetcar equipment housing and the traffic signal controller.

Island track circuits shall be designed to retain the crossing warning until the last train car has passed the edge of the highway to a predetermined distance. This distance shall be determined separately for each grade crossing

during final engineering. Automatic gate and flasher signals shall normally be mounted 12 feet from the near rail, but in no event closer than 10 feet from the near rail.

A pushbutton or key switch to activate and/or cut out each approach track circuit shall be provided in a locked box outside of the crossing equipment housing.

A train approaching a highway crossing from a nearby track switch shall proceed at restricted speed. Signal system and train operation rules shall ensure that the crossing warning devices are activated with full warning time prior to allowing the train to cross the roadway.

At crossing locations where highway traffic signals could conflict with grade crossing warning signals, additional preemption circuit shall be provided such that the preemption shall be effective before the grade crossing warning system is activated as required by traffic engineering.

On multi-lane highways, cantilever-mounted flasher signals shall be used where deemed necessary to improve roadside warning. These flashing light signals shall be mounted over the inner traffic lanes to provide the motorist with an unobstructed view of the signals.

Crossing gate indicators that provide the actual status of crossing gate operation to the train operator shall be provided at all crossing locations equipped with automatic crossing gates. These indicators shall display “flashing lunar white” when the grade crossing system has been activated and crossing gate is moving, and display “solid lunar white” when the gate arms are fully lowered and level. These indicators shall be displayed for normal and reverse running trains on both tracks.

13.2.9 Interlocking Control

13.2.9.1 General

In ABS territory, the signaling system shall safeguard against opposing or conflicting movements of trains within interlocking areas. Wayside signals shall maintain following trains at a safe braking distance apart. Reverse running shall be controlled by the home signal. That is, in double-track sections, a route can be selected in the reverse direction from a home signal. Approach locking or time locking shall be provided for routes in approach to interlocking, with the approach locking being the preferred method. No routes are to be cleared through an interlocking until the switch machines are locked in the proper position. Route locking shall also be provided to prevent the movement of a track switch in advance of a train having entered the route. Detector track switch locking shall be provided to prevent operation of a track switch where a train is within the detector area. Traffic

locking shall be provided to prevent change in the direction of traffic throughout any block while it is occupied or while a route has been cleared into the blocks.

13.2.9.2 Mainline Route Selection

For normal train operation at mainline or terminal interlockings, including where single track turns to double track, straight-through or normal routes shall be aligned, and the signal shall clear automatically whenever track circuits detect occupancy by trains on the approach to the interlocking.

Alternate routes request shall be initiated by OCC or wayside pushbuttons.

13.2.9.3 Freight Sidings

Signaling on freight-only turnouts on UTA mainline tracks shall conform to the Code of Federal Regulations (CFR 49, Part 236). Freight sidings from the UTA mainline shall be protected by electrically locked switches and derails on the siding track. The electric lock release shall be controlled by appropriate lock releasing circuitry. For exits from the mainline, the electric lock shall be released by a series overlay track circuits. All conflicting moves in the mainline and siding track area shall be protected by the UTA signal system. At locations where double track turns to single track, automatic clearing shall not be implemented for following trains for movements into the single-track area when the single track is occupied by a train.

Electric locks and circuit controllers shall be provided at all siding track hand-throw switches in ABS territory and connected to signaling system. Circuit controllers shall be provided at all siding track derails and connected to the signaling system.

13.2.9.4 Turnback Operations

Route selections total tracks at terminals with power switch machines shall be set automatically via track circuit occupancy and programmed track priority. The track priority shall be field selectable to be set in the interlocking signal case. If the priority track is occupied, the interlocking will automatically route the signals to the non-occupied track. For tail track to mainline moves, a wayside push button shall be installed to allow train operator to select a route for the normal direction only. Reverse direction route selection from tail track to mainline shall be through OCC only.

13.2.10 Yard

Yards shall use hand-operated trailable switch machines. All train movements within yard limits shall be in accordance with the book of operating procedures pertaining to the yard.

There are to be no signals in the yard. Access to the mainline shall be controlled by wayside signals and the dispatcher. When a route is cleared for movement onto the mainline, route locking shall be established which prevents the mainline-to-yard moves on that track. In addition, mainline-to-yard movements shall be controlled by wayside signals.

13.2.11 Signal Power

13.2.11.1 Power Source

AC power shall be provided from a local commercial power source for signal equipment housing and highway grade crossing equipment housings.

13.2.11.2 AC Signal Power Design Requirements

AC power (220/110 Vac, 60 Hz) shall be used for signaling, grade crossing warning, and non-signal auxiliary equipment. Where AC power is used for a purpose other than signaling, appropriate protection shall be included in the circuitry to avoid the possibility of a ground fault affecting the signal system. Power for track switch heater shall be sourced from either gas or local AC power utility.

Battery backup, with at least 8 hours of standby capacity, shall be provided at all highway grade crossing equipment housing for operation of crossing warning devices at normal function rate, and all signal equipment housing locations containing approach track circuits. The battery backup system shall be designed to provide a means to isolate the battery banks from the rectifier without the disarranging the wires.

Current limiting protection shall be provided to guard against overload. The battery for AFO track circuit energization shall have voltage sufficient to compensate for line voltage drop at the transmitter locations. All AFO track circuits shall be designed using the manufacturer's frequency separation recommendations. AFO circuits shall be designed so that trains traveling in a normal direction will arrive at the receive end of the circuit first. AFO track circuits shall be designed to work effectively using a 0.25-ohm shunt sensitivity.

Full wave rectified power supplies shall be provided for DC electric switch machines. One power supply is required for each electric switch machine.

All transformers and rectifiers shall be rated to operate with a load at least 25% greater than the maximum circuit design load to which they are applied.

Surge arresters shall be used for track circuits, cables, and electronic circuit equipment to protect against damage caused by lightning and electrical transients.

13.2.11.3 Operations Control Center and Signal Communications

The Operations Control Center (OCC), located within one of the Rail Service Centers, is responsible for monitoring and controlling train operations for each of the LRT and Streetcar lines. Dispatcher workstations, supported by a train control system server, enable computer-assisted operations monitoring and control, as well as direct dispatcher intervention. Controls and indications for track block occupancies, electric switch machine, wayside signal, grade crossing health, and switch heater health status, along with all industry standard control and indications, shall be available at the OCC.

A fiber optic network connects all signal equipment housings (e.g., interlocking, and intermediate signal) and all grade crossing housings to the train control server. For additional information, refer to Chapter 14, Section 14.8.3, 'Signaling Communications and TPSS SCADA Fiber Optic Cable.'

13.2.12 Signal Equipment and Technologies

13.2.12.1 Track Circuits and Signal Control

Coded track circuits using an AC interface shall be employed in the UTA mainline. Through interlocking limits, AFO track circuit shall be used. Insulated joints are required at interlockings limits. Impedance bonds shall be provided at insulated joint locations for traction power negative return current. These impedance bonds shall have a 1500-amp capacity and be tuned or provide sufficient impedance at 60, 100, 156 hertz to be compatible with train detection and coded track circuits. Both vital and non-vital logic signal control circuits shall be designed using conventional relay logic and/or vital and non-vital microprocessors, meeting the recommendations of the AREMA Signal Manual.

In embedded track sections where train detection is required, single rail AFO track circuits shall be used.

13.2.12.2 Interlocking Equipment

All interlocking hardware shall comply with the recommendations of AREMA Signal Manual. The following criteria highlight some of the major signal equipment for mainline interlockings.

13.2.12.3 Relays

Vital relays shall be of the plug-in type., Apart from special-purpose relays, vital DC relays shall have a minimum of six independent front/back contacts.

Non-vital relays, excluding special-purpose relays, shall be of the plug-in type and have an operating voltage range of 12 to 24 Vdc.

All relays shall be configured to allow visual inspection of the relay state (energized or de-energized) without disassembly.

13.2.12.4 Switch Machines

All track switches for LRT and Streetcar operation in ABS territory shall use dual (power and manual) control, high-speed switch, and lock movements operating at 110 Vdc. These switch machines shall have internal 110 Vac heaters, designed to generate sufficient power, factoring in local winter weather conditions, in the circuit controller and motor compartments.

Mainline track to railroad siding track switches shall use hand-thrown switch machines, which shall be paired with electric locks, switch circuit controllers, and facing point lock protection in signaled areas. The switch shall interface with a derail if there is an opportunity to store a vehicle on the siding track. Electric switch locks shall be of the low-profile type, such as Alstom Signaling Inc., Model 10, US&S SL-21A, or an equivalent. The unlocking device shall operate on a 10- to 12-V dc power source.

The yard shall utilize hand-operated yard switch machines. UTA shall have the option to use trailable switch machines and switch position indicators. For LRT and Streetcar operation in street run territory, all track switches shall employ trailable power switch machines. A track switch heater shall be installed on all powered track switches that are unprotected from the weather.

13.2.12.5 Signals

- ABS or Interlocking signals shall be the high type, long-range LED color light railway type. Lenses shall have a diameter of 8¾ inches.
- ABS or Interlocking Signals shall include 24-inch-wide backgrounds and shall be mounted on 5-inch masts, typically 13 feet from the bottom of signal to the top of the rail. ABS or Interlocking Signals shall be equipped with ladders and platforms. Shorter signals may be permitted for specific local conditions.
- ABS or Interlocking Signals shall be visible to the train operator at least 1000 feet in advance and when stopped at the signal.
- ABS or Interlocking Signals shall be LED type color-light signals for 12 Vdc.
- LRT traffic or route bar signals shall be of the LED type.
- LRT traffic or route bar signals shall be square in shape.
- Highway rail grade crossing flasher signals shall be of the LED type.

13.2.12.6 Interlocking Control Circuits

Interlocking control circuits shall adhere to a microcomputer design. Vital relays shall only be used where necessary to guarantee the vitality of an input or output. Where possible, the control logic algorithm shall follow standard signaling logic. The interlocking function shall be documented in a written format using logic code. In addition to code logic, a traditional relay logic printout shall be provided to illustrate circuit equations. Design qualification testing shall be conducted to confirm signal indication logic.

13.2.13 Highway Crossing Warning Devices

Standard highway crossing gate mechanisms such as Safetran, Western Cullen Hayes, or equivalent shall be utilized. For approach and island circuit function, standard overlay track circuits such as AFTAC AFO, PSO (Phase Shift Overlay), or equivalents shall be employed.

13.2.14 Equipment Housings

Signal equipment shall be designed for operation in the local environment, with features including electrical heating and fan cooling via HVAC. The design and installation shall accommodate the wayside operating environment. All equipment houses shall be of the bungalow type and not be less than 6 feet by 6 feet in size.

Prefabricated instrument houses and cases shall be of adequate size to house all signal equipment, allowing for spare space and future expansion (from single track to double track and system upgrading as needed). These

installations shall be placed at various locations along the light rail alignment, including but are not limited to interlockings, ABS, highway-grade crossings, electric lock locations, and track switch heater installations. The instrument house racks shall have a standard open-frame configuration. Joint use of equipment housings shall be used where practical.

13.2.15 Wire and Cable

Signal system wire and cable shall conform to the recommendations of the AREMA Signal Manual and, where applicable, the National Electric Code. All wires shall be numbered or color-coded. Any copper cables larger than AWG 2/0 used for rail bonding, cross bond, and impedance bond shall feature a permanent method of identifying the owner (UTA) on the copper conductor. Acceptable identification may include center marking, a stamped core, or any other method approved by UTA that ensures traceability of the cable throughout its operational life.

13.2.15.1 Instrument Housings

- All incoming cables shall be terminated on a main terminal board which shall be accessible from both sides. Each wire, including spares, shall be terminated on a disconnect type terminal arrangement, enabling circuit opening without removal. Field cables shall be routed on the terminal side to which they are connected, avoiding crossing with house wiring terminals.
- All incoming cables, except those running underground to local devices, shall be equipped with series arresters.
- All track lead cables shall be equipped with series arresters.
- In instrument houses, wiring shall lead directly from the main terminal board to the apparatus. Energy buses shall loop feed from the main terminal board to each apparatus rack terminal board. Inter-rack wiring shall be executed by running a single conductor wire between apparatus, not terminating this wiring on the rack terminal board. Internal wiring between apparatus racks and main terminal boards of instrument housings shall be carried overhead at rack top level in wire troughs.

13.2.15.2 Wayside Cables and Conduit

Local cables, connecting instrument cases or houses with trackside equipment such as signal lighting, switch machines, electric locks, circuit controllers, and track circuits, shall be installed in conduit wherever possible. If conduit installation is not feasible, direct burial cable may be used. Signal power cables shall either be suspended cable or installed in conduit. Conduit installation for cable routing shall be implemented in critical areas such as grade crossings. Main express cables, which connect adjacent trackside signal housings, shall use fiber optic cable communications and installed in conduits.

All types of cables used in embedded track or at highway rail grade crossings shall be encased in conduit.

13.2.15.3 Fiber Optic Cable Communications

The fiber optic network, supporting the monitoring and control of each LRT line's train operations at an OCC and facilitating communications between signal and/or grade crossing warning equipment housings, is provided by UTA's Signaling Communications & TPSS SCADA Fiber Optic Cable. Refer to Chapter 14, Sections 14.3.1 and 14.8.3 for further description and information.

13.2.15.4 Operations Control Center Equipment

The train operations control office system will be located within the OCC at one of the Rail Service Centers. The office system shall consist of dispatcher workstations, server(s), and routers, interconnected by an Ethernet local area network (LAN). The office system building complex shall be interfaced to UTA's fiber optic network, which connects all signaling and grade crossing houses. For more information on this fiber optic network, refer to Chapter 14, Section 14.8.3 'Signaling Communications & TPSS SCADA Fiber Optic Cable'.

13.2.16 Installation, Testing, Manuals, and Training

13.2.16.1 Installation

The installation of signal equipment shall conform to the relevant sections of the AREMA Signal Manual and/or manufacturer's recommended methods. Staged construction shall follow the guidelines indicated in the integrated construction schedule.

13.2.16.2 Testing

All signal components, subsystems, and systems shall be subject to the applicable factory tests, field tests, and inspections to verify design, nameplate rating, and to ensuring proper performance, safety, reliability, and compliance with specifications. Test procedures and inspections shall generally be conducted in accordance with manufacturer's specifications and comply with FRA requirements and the AREMA Signal Manual where applicable.

13.2.16.3 Training

Training programs shall equip UTA personnel with comprehensive knowledge of operations and maintenance associated with the signal system. Technical manuals shall extensively cover all aspects of signal system operations, maintenance, repair, and spare parts provisioning.

END OF CHAPTER 13.

DESIGN CRITERIA MANUAL

/ CHAPTER 14

COMMUNICATIONS

Table of Contents

CHAPTER 14 COMMUNICATIONS 1

14.1 General 1
14.2 Codes and Standards 3
14.3 Installation, Testing, Manuals, and Training 3
14.4 Warranty and Initial Provisioning 4
14.5 As-Built Drawings 4
14.6 Communications Systems Interfaces 5
14.6.1 Operational Compatibility 6
14.6.2 Electromagnetic Interference (EMI) 7
14.7 System Safety and System Security 7
14.7.1 IP Security Camera System 7
14.7.2 Emergency Communication Devices 9
14.8 Communication Transmission System 10
14.8.1 Fiber Optic Conduit Duct Bank 11
14.8.2 Station I.T. Data Fiber Optic Cable 11
14.8.3 Signaling Communications & TPSS SCADA Fiber Optic Cable 12
14.8.4 Advanced Traffic Management (ATMS) Conduit Duct Bank and Fiber Optic Cable System 13
14.8.5 Microwave Transmission System 13
14.9 Fare Collection Devices 13
14.10 Electronic Passenger Information Signs 14
14.11 Telephone System 14
14.11.1 VOIP Telephones 14
14.12 Radio Systems 15
14.12.1 Two-Way Radio 16
14.12.2 Vehicle Radios 17
14.12.3 Mobiles and Portable Radios 17
14.13 Rail Transit Communications 17
14.13.1 Wayside Communications Equipment 17
14.13.2 Central Control System (CCS) and SCADA Remote Terminal Units (RTUs) 18
14.14 CRT Communications 19
14.14.1 Fire and Intrusion Detection System Alarms 19
14.15 Communications Power and Raceway 20
14.15.1 Communications Raceway 20
14.15.2 Communications Power 21
14.16 Battery and UPS Back-up Power Supply 21

CHAPTER 14 COMMUNICATIONS

14.1 General

This chapter describes the functional requirements for communications across various transit systems, including bus rapid transit (BRT), commuter rail transit (CRT), light rail transit (LRT), and Streetcar, and outlines important interface criteria for the development of the final design specifications. Essential communication components for these systems typically require a Fiber Optic Communication System, with primary elements including:

- Fiber Optic Conduit Duct Bank specific to each line (BRT, CRT, LRT, Streetcar)
- Station Information Technology (IT) Data Fiber Optic Cable
- Signaling Communications Fiber Optic Cable
- Advanced Traffic Management (ATMS) Conduit Duct Bank and Fiber Optic Cable System

In cases where fiber optic implementation is not feasible, alternative communication systems should be considered and shall be approved by UTA.

Key aspects of these systems include, but are not limited to:

- Central Control System (CCS): This system features supervisory control and audio interface equipment, enabling UTA Operations personnel to remotely monitor and control UTA trains and the signal system. Additionally, is allows for the monitoring of ticket vending machines (TVMs), passenger stations, and wayside facilities.
- SCADA Equipment: This equipment interconnects the UTA Rail Control Center (RCC), envisioned to be located at the UTA Warm Springs facility, with all passenger stations, signal cases and houses, communications equipment rooms/houses and cabinets, bridge facilities, and storage and maintenance facilities at the North Yard Maintenance Facility and other yards. SCADA equipment shall interface with alternate dispatch locations.
- Radio Control Equipment: To be used at the RCC, which shall be coordinated with UTA's commuter rail, LRT, and bus operations.
- Transmission Media: Microwave equipment, fiber optic cable, and other transmission media shall be utilized to connect the RCC to other UTA facilities.
- Digital Telephone PBXs: These systems facilitate telephone and voice communication from the RCC to other UTA personnel and external parties.

- Emergency Communication Devices: To be installed on platforms and other strategically placed passenger areas for emergency purposes.
- Communication Support Infrastructure: Includes communication rooms, cabinets, batteries, battery chargers, raceways, etc., essential for the reliable operation of wayside communications equipment.

Safety and Security systems, including video surveillance and emergency communication devices, shall be installed at stations and park-and-rides.

Voice radio communications will conform to the most recently installed radio system configuration approved by UTA Information Systems. This ensures interoperability with existing radio systems and adjacent first responder organizations. The specifications for radios shall be defined by UTA Information Systems, in coordination with bus operations. Radio frequency (RF) coverage analysis shall be performed prior to design.

A procurement contract shall be executed, which shall include commissioning, technical support, and training. Field construction activities, such as antenna installation and base station site provisions, shall be covered under separate work.

The following features may or may not be provided for the commuter rail system. At a minimum, appropriate infrastructure provisions and other reasonable, cost-effective design-related actions shall be implemented to simplify the future installation of these features:

- Surveillance System: A system comprised of various types of digital cameras to enable UTA personnel at the Central Control Facility (CCF), UTA Police, and others with an official need to monitor activities at the Warm Springs Maintenance Facility, yards, station parking facilities, and passenger station platforms.
- Public Address/Variable Message Sign (PA/VMS) System: This system, along with interface equipment, shall be accessible from the central control room, the security command-monitoring console, and at passenger stations to enable real-time audible and visual text display of passenger information.
- Fire and Intrusion Detection Alarms: These alarms are to be installed at designated locations for enhanced safety and security.
- Digital Fiber-Optic Based Cable Transmission System (CTS): This system is designated to carry UTA voice and data communications.
- Analogue Fiber Optic CTS: This system connects selected commuter rail facilities with the CCF for UTA CCTV video and radio communication information.

14.2 Codes and Standards

The design of the CCF, SCADA, and the communications system shall adhere to the latest revisions of the codes and standards of the following organizations:

- American National Standards Institute (ANSI)
- American Railway Engineering and Maintenance-of-Way Association (AREMA)
- Building Industry Consulting Services International (BICSI)
- Building Officials and Code Administrators (BOCA)
- Consultative Committee for International Telephone and Telegraph (CCITT)
- Electronic Industries Alliance (EIA)
- Federal Communications Commission (FCC)
- Institute of Electrical and Electronic Engineers (IEEE)
- International Building Code (IBC)
- International Organization for Standardization (ISO)
- Internet Engineering Task Force (IETF)
- National Electrical Manufacturers Association (NEMA)
- National Fire Protection Association (NFPA)
- National Television Systems Committee (NTSC)
- Telecommunications Industry Association (TIA)
- Federal Information Processing Standard (FIPS)

14.3 Installation, Testing, Manuals, and Training

Field installation procedures consistent with industry best practice and the radio manufacturer's recommendations shall be employed. All radio installations will be performed under UTA supervision at UTA facilities.

Testing, both in the factory and in the field, shall be certified as conducted in accordance with approved plans and procedures. Field tests shall be witnessed, while factory tests may be witnessed at UTA's discretion. Requirements for the publication of operating and maintenance (O&M) manuals, as well as training for UTA personnel, shall be developed as necessary.

For additional information on installation and testing requirements, refer to:

- Section 14.7.1 'Fiber Optic Conduit Duct Bank'.

- Chapter 8 'Stations and Stops'. Section 8.6.11.5 'Communication and Power Conduits'.
- Chapter 15 'Fare Collection Equipment'.

Provisions shall be made for comprehensive communications system testing and documentation. This is to ensure that all elements of the communications design are properly integrated and compatible with each other, as well as with the existing UTA communications system.

14.4 Warranty and Initial Provisioning

The contractor shall provide a warranty for in-service equipment, which is mandatory for a specified period. This period should be 1 year following delivery, or after installation and acceptance testing. The exact duration of the warranty period shall be explicitly stated in the contract provisions.

Unless specified otherwise in the Contract Documents, the Contractor shall replace (furnish, deliver to the specified location, install or correct) at no additional cost due to material, design, or manufacturing defects, and/or poor workmanship.

During the development of both preliminary and final specifications, a clear maintenance philosophy shall be established, alongside the corresponding spares provisioning strategy. An allowance for the initial provisioning of spares shall be included, based on the contractor's recommendations. This approach ensures that adequate resources are available for maintaining the equipment in optimal working condition throughout its lifecycle.

14.5 As-Built Drawings

As-Built drawings, clearly labeled and accurate, shall be provided to detail the network infrastructure. These drawings shall include, but are not limited to, the following elements:

- Paths of required conduits, including conduit size.
- Cable type, along with OTDR (Optical Time-Domain Reflectometer) and related loss measurements.
- Locations of handholes.
- Designated locations of various equipment and facilities, such as:
    - TVM
    - Card readers
    - Radios
    - Passenger information signs

  - IP security cameras
  - Stand-alone message signs
  - Light poles and camera poles
  - Kiosks
  - Map cases

These As-Built drawings are crucial for accurately documenting the implemented network infrastructure, ensuring clarity and ease of reference for future maintenance and upgrades.

14.6 Communications Systems Interfaces

The communications system's design shall ensure full integration with other project activities and existing systems. Key interfaces include:

- Vehicles
- Station Electronics
- Signal System
  - Traffic Signal System (specific to BRT)
- Operations Control Center (OCC)
- Fiber Optic Cable Transmission System

The communications contract shall encompass the design and supply of vehicle radios, installed under UTA supervision. Mandatory prototype testing for new or modified unit shall focus on mechanical installation, cabling, power supply, controls (specifically cab controls for LRT/Streetcar), antennas, and integration with respective signal systems, cable transmission systems, and UTA's existing radio dispatching system.

Intelligent Transportation System (ITS) devices shall be incorporated to enhance system performance, considering travel time, reliability, operational efficiency, and safety. ITS considerations include vehicle priority, operations management, real-time passenger information, and safety systems. SCADA systems shall be evaluated for all facilities. The final ITS implementation will be determined and approved by UTA during the preliminary design phase.

Conduits for communications lines, installed by the respective site contractor, shall be depicted in both civil and electrical sections of engineering drawings. All equipment, including conduits, cables, and wiring, shall be clearly labeled on both ends.

The design shall conform to the latest editions of all appropriate applicable standards, regulations, and codes, which may include but are not limited: FRA, AREMA, NEC, IEEE, TIA/EIA, and MUTCD (US and UT). The design must ensure compatibility and integration with both existing and future systems within the wayside communication infrastructure. .

Specific Requirements for CRT:

Digital controllers in the CRT system shall communicate via non-proprietary protocols and interfaces. Where not feasible, equipment should be monitored and/or controlled through hardwired dry contacts. Each facility shall provide a single point of system/control access for monitored and controlled equipment. The communication systems shall interface with all systems required for operations, maintenance, or emergency operations. As it relates to the wayside vital and non-vital rings, the associated network equipment, such as the vital processor communication interface modules and Ethernet switches, must interface with each other to ensure that the wayside signal system operates properly within the PTC communication design. In the crossing network ring, the network switches and crossing predictors must also interface with each other to ensure accurate crossing warning times within the PTC communication design.

14.6.1 Operational Compatibility

The designer shall be responsible for ensuring that all extensions and/or modifications to the existing UTA communications system are compatible with, and capable of operating within, the existing UTA system(s) and environment(s). The existing in-service communications systems shall remain operational during all modifications and extensions.

To this end, all extensions and/or modifications to the existing UTA communications system, including but not limited to concepts, specifications, designs, and drawings shall receive prior approval from UTA Information Systems before the commencement of construction.

Voice radio communications will conform to the radio system configuration approved by UTA Information Technology. The specifications for radios shall be defined by UTA Information Technology, in coordination with rail operations, and shall be a procurement contract which shall include commissioning, technical support and training. Field construction such as antenna installation and base station site provisions shall be covered under separate work.

14.6.2 Electromagnetic Interference (EMI)

To ensure that communications equipment functions effectively within its electromagnetic operating environment, specific mitigation measures shall be implemented. These measures include:

- Avoid the placement of communications systems near EMI-generating equipment.
- Maintain adequate separation between non-UTA utilities, electrical feeders, and equipment that may cause interference.

The communications system shall be designed to function reliably in electromagnetically hostile environments This requires addressing potential interference with other electrical systems, including signals, vehicles, and traction power. All sources of undesirable emanations within the communications system, such as the vehicle propulsion system, signaling system, and nearby non-company utilities, shall be considered.

Additionally, it is recommended that necessary mitigation measures be included in the designs by vehicle, facilities, and station designers to ensure comprehensive EMI management.

14.7 System Safety and System Security

The design shall address system elements accordance with the requirements of the applicable standards listed in UTA's System Security Plan (SSP). This section shall apply to transit centers, bus stations, parking structures, etc., but shall not apply to curb side bus stops. In case of any conflict between standards or requirements, the most stringent shall apply. The SSP, along with standards, specifications, regulations, design handbooks, safety design checklists, and other sources, will be reviewed for pertinent safety design requirements. The design shall establish criteria derived from all applicable information.

14.7.1 IP Security Camera System

The IP Security Camera system shall be designed to safeguard UTA assets, monitoring and recording activities at stations and park-and-ride lots. Infrastructure, including communications houses/cases, conduits, power, and fiber optic cable or CAT6 cable, and other features shall be provided to support the installation of this system. Camera design and placement shall be coordinated with the UTA Information Systems department and the UTA Video Surveillance Administrator, ensuring integration with existing video management system.

Specifications for cameras:

- Typically be solid-state, mini-dome, fixed lens, color units with integral camera, housing, and lens.
- Low and wide dynamic capabilities and produce a clear video resolution, at a minimum of 720p.
- Pan/tilt/zoom (PTZ) features for optimal viewing, where necessary.
- Vandal-resistant enclosures.
- Approval for resolution, field of view, and coverage area by the UTA Safety Department.

14.7.1.1 Surveillance Coverage

Surveillance coverage includes station platforms, walkways, parking lots, entrances, emergency communication devices, fare vending areas, and at all UTA maintenance yards, layover yards, tail tracks, other designated UTA facilities and locations to view UTA rolling stock, station platforms, parking lots, access gates, end of vertical circulation elements (stairs, escalators, elevators) and building access areas. The designer shall determine that the average lighting levels are adequate. Revenue transaction points shall have a dedicated fixed security camera positioned to capture the transaction with the customer, and either the vending equipment or UTA personnel. Specific camera requirements include:

- Vehicle spaces: 1 fixed color camera per 25 spaces
- Entrances and exit lanes: 1 camera per lane
- Emergency Communication Device: 1 fixed field of view camera per device
- Ticket Vending Machine: 1 camera per machine

These requirements shall be approved by the UTA safety and security department.

Station platform security cameras should be standardized system wide. There shall be a minimum of three security cameras placed at the outer ends of the station canopy. These cameras shall be connected to the UTA data network. Procurement and installation of IP security cameras will be coordinated with UTA Information Systems Technology Deployment.

Pole-mounted cameras shall have a minimum mounting height of 12 feet above the finished surface, unless otherwise directed by UTA.

Refer to Chapter 8, Section 8.6.11.5 'Stations Communication and Power Conduits', for additional description and requirements.

14.7.1.2 Network Video Recorder (NVR)

All digital video images shall be always recorded by a network video recorder (NVR). Video signals shall be real-time digital transmissions from passenger stations over dedicated single mode fiber optic cable to the CCF. The Video Management Software shall enable viewing of multiple locations on a single screen and display time, date, and location stamps. The video surveillance system shall be capable of transmitting real-time (30 frames per second per camera) to the CCF. The video transmission system (VTS) shall provide video and control transmission from/to the CCF. The video surveillance system shall be consistent with existing UTA equipment and software packages including elements such as cameras, digital network video recorders, Power Over Ethernet switches, routers, and operating system. The system shall record images at 15 full frames per second per camera and provide an archive storage of 30 days at this frame rate. Both real-time viewing and recording shall be at full resolution of the camera.

Any additional licenses required by the UTA camera system shall be provided.

The IP Security Camera system shall incorporate analytics software that enables it to automatically alert designated personnel of any abnormal behavior and highlight such events in the recorded video file for easy review and evaluation.

14.7.2 Emergency Communication Devices

Emergency communication devices (ECDs / Call boxes) shall be provided across all platforms, parking structures, park-and-ride facilities, and in areas such as pedestrian overpasses or underpasses to ensure accessibility for patrons and employees to call for help. These devices shall connect to either the UTA police dispatch or local police dispatch.

The design shall include:

- 120 Vac power to each ECD.
- Capability for Voice over IP (VoIP) ECDs as an alternative to standard Plain Old Telephone Service (POTS) lines.
- Uninterruptible Power Supply (UPS) backup for all NVRs and ECDs, including any network devices used for ECDs.
- ECDs shall be vandal resistant and of a weatherproof design for hands free operation with a minimum NEMA 3R rating, Underwriter Laboratory and FCC approval, and ADA compliance.

- Hands-free operation shall be straightforward, without the need for dialing. Pressing a button should establish a direct connection to the operator.
- ECDs shall draw power from the communication line and require no additional power line attachments and be capable of off-site live monitoring of emergency conversions.

ECDs shall be placed as follows:

- Each platform shall have at least one ECD.
- Surface park-and-rides shall have a minimum of one ECD, with an additional ECD for every 300 spaces.
- Each overpass/underpass shall have a minimum of one ECD. Overpasses or bridges isolated from other transit elements may require additional ECDs with blue LED lighting.
- This placement and frequency of ECDs shall be coordinated with UTA during the concept and preliminary engineering design.

Refer to Chapter 8, Section 8.6.11.5 'Stations Communication and Power Conduits', for additional description and requirements.

14.7.2.1 Microprocessor Control Communications Unit

The Microprocessor Control Communications Unit (MCCU) shall facilitate access and control from the CCF to all radio, Public Address and Telephone (PAT), and Public Address (PA) circuits, both audio and visual. All conversations to and from the MCCU shall be recorded. The operator interface with the MCCU shall be via a computer-generated Graphical User Interface (GUI).

14.8 Communication Transmission System

A fiber-optic based communications transmission system (CTS) shall be installed along the UTA and Union Pacific (UP) ROW. This system shall be designed to interconnect various field signals, including IP Security Cameras, Radio, SCADA, PAT, PA, ET, grade crossing signals, and TVM network data and voice signals to and from the CCF. The CTS shall include:

- Fiber optic cable plant
- Data switches
- Data racks
- Patch cables
- Fiber termination housings and connector panels

- Other necessary equipment to provide communication channels at native signal level between sites.

The backbone optical system shall be configured and monitored for high reliability using network redundancy and a network management system. It shall continue to operate normally in the event of a single fiber, point, or equipment module failure using alternate paths within the network ring. The system shall meet standard availability specifications (e.g., 99.999% availability) through validiation network tests.

14.8.1 Fiber Optic Conduit Duct Bank

An exclusive-use fiber optic conduit duct bank, consisting of four 1.5-inch conduits, will be provided along the entire length of the BRT, CRT, LRT, and Streetcar corridors. The color-coded conduits used shall be red stripe on black, black, orange, and grey.

The I.T. data fiber optic cable shall be installed in the grey conduit, and the signaling communications cable shall be installed in the orange conduit. A detector wire shall be installed in the grey conduit for the length of the corridor.

Pull boxes will be located at a maximum interval of every 1,200 feet along the duct bank run or as designated in project drawings and at each equipment site.

Lateral conduit connections consisting of two 2-inch conduits, shall be placed from the duct bank to each power control cabinet (PCC), traffic signal controller (for future contingency purposes), all signal equipment house locations, TPSS (as applicable), and the OCC.

*Note: PCC includes multiple cabinets that include both low voltage and high voltage sub-cabinets.

14.8.2 Station I.T. Data Fiber Optic Cable

This fiber optic cable system interconnects all stations (BRT, CRT, LRT, and Streetcar) with the headquarters I.T. data servers. It is essential for processing data from ticket vending machines, fare card readers, passenger information systems, and IP security cameras. Installation and equipment shall be as follows:

- The fiber count shall be in multiples of 12, excluding any “odd” fiber counts.
- All fibers shall be routed into and out of the splice/patch panel of each station’s power control cabinet, either spliced through in the splice panel section or routed to the patch panel as per the fiber cable schedule design document.

- A rack-mounted splice/patch panel, such as the Leviton Model RDP-700 or an equivalent, shall be supplied and installed.
- Additionally, 12-port patch panel fiber connector assemblies using SC connectors shall be provided.
- Use 144 Strand Single Mode Fiber.

For additional descriptions and requirements, refer to:

- Chapter 8 'Stations and Stops', Section 8.6.11.5 'Communication and Power Conduits'.
- Chapter 15 'Fare Collection Equipment',
    - Section 15.2.4.9 'TVM Communications'
    - Section 15.2.5.10 'Card Reader Communications'

14.8.3 Signaling Communications & TPSS SCADA Fiber Optic Cable

This section outlines the fiber optic cable criteria for both CRT and LRT lines, supporting the Signaling System communications with their respective OCC and the Supervisory Control and Data Acquisition (SCADA) system for the Traction Power Substations (TPSS). This design shall be as follows:

- Use 144 Strand Single Mode Fiber.
- The fiber count shall be in multiples of 12, excluding any "odd" fiber counts.
- Fibers 1 - 36 of this cable are allocated to signaling communications, interconnecting all signal equipment houses with the OCC to support train control and dispatcher functions.
- Fibers 37 - 72 are allocated for TPSS SCADA, connecting all TPSS units with the OCC and Maintenance Facility for control and monitoring.
- Fibers 73 – 144 are allocated as reserves for future use.
- All 144 fibers of this cable shall be routed into and out of the splice/patch panel of every signal equipment house on the alignment.
- The fibers will be spliced through the splice panel section within the fiber patch panel as per the fiber cable schedule design document.
- Wall-mounted Splice/Patch Panel that features the ability to secure a splice tray will be supplied and installed.
- 12-port SC bulkhead fiber connector inside of the fiber distribution panel.

14.8.4 Advanced Traffic Management (ATMS) Conduit Duct Bank and Fiber Optic Cable System

The UDOT ATMS conduit duct bank and its companion ATMS fiber optic cable shall be compliant with UDOT's latest specifications. Coordinate with roadway owner entity for project scope specifics.

Refer to Chapter 10 'Traffic Control and Signals', for additional description and requirements.

14.8.5 Microwave Transmission System

The Microwave Transmission System is crucial for interconnecting UTA maintenance and operations facilities with the CCF across all transit systems.

UTA's existing digital microwave system shall be used for these communications, particularly where they are required:

- In mixed flow areas (Type I) for BRT operating under the jurisdiction of UDOT or local agencies.
- To facilities not located on the CRT or LRT right-of-way.

The number of new microwave channels to be supplied shall align with the UTA's operating requirements specific to each location.

The microwave system may also carry UTA's radio audio.

All new microwave equipment shall match the manufacturer and model number of UTA's existing equipment. If the existing equipment is end of life, the new equipment shall be from the same manufacturer and be interoperable.

Equipment shall be designed to support a resilient configuration, wherever feasible.

14.9 Fare Collection Devices

A fiber optic network is established to connect all TVMs and Card Readers at stations to a fare collection server at UTA Headquarters. This server facilitates:

- Workstations that monitor and control credit card transactions.

- Revenue administration.
- TVM maintenance operations.

For additional information on fare collection equipment and the specific requirements for the fiber optic network, refer to the following sections:

- Chapter 15 'Fare Collection Equipment'.
- Section 14.3.2 'Station I.T. Data Fiber Optic Cable'.
- Chapter 8 'Stations and Stops', Section 8.3.7 'Communication and Power Conduits'.

14.10 Electronic Passenger Information Signs

Each station platform should be equipped with the following to support electronic passenger information signs:

- A minimum of two conduits and junction boxes (one for power and one for communications) shall be placed from the station PCC to designated sign locations on the platform.
- IP digital passenger information sign installed at each designated location. These signs shall:
    - Feature an integrated PA system for announcing predictive departure information.
    - Require a 20-amp circuit, with an additional spare circuit provided.
    - Be strategically placed near the trackside end canopy, displaying predictive departure times for trains on that track.

Additionally, the conduit design should accommodate future expansions for messaging and/or communications systems at designated locations.

14.11 Telephone System

Modifications to telephone equipment shall be compatible with and interfaced with UTA's existing corporate telephone system. All such modifications shall be coordinated through the UTA's Communications Manager.

14.11.1 VOIP Telephones

Standard push-button dial VoIP telephones shall be provided at several key locations, including communications rooms/houses, signal houses, the CCF, maintenance facilities, layover yards, and other locations as designated by UTA. In general, these telephone sets shall be primarily configured for internal UTA calls with four-digit dialing capability for all UTA extensions. Telephones shall include remote polling capability to determine the operational

status based on internal diagnosis, ensuring proper operation. The telephones shall include all of the features of the existing UTA telephone system.

14.12 Radio Systems

Modifications to UTA's existing radio system will facilitate communications along the BRT, LRT, CRT, and Streetcar alignments. This includes communication between vehicles, dispatchers, supervisors, maintenance personnel, and other relevant personnel along the ROW.

The radio system shall be operationally independent of the various UTA transportation systems, except when intercommunication is required. Radio control equipment employed at the RCC shall be coordinated with UTA's CRT, LRT, and bus operations.

Radio system elements shall include:

- On-board cab radios
- Handheld units (portable radios)
- Radio units mounted within vehicles (mobile radios)
- Dispatcher station radios

Voice radio control for vehicle operations will occur at the start, end, and during each run. Operators, whether on buses or trains, may be required to report schedule delays via voice conversation or canned data message using their respective vehicle radios, in accordance with established UTA procedures. This requirement ensures consistent communication and control across all transit services, maintaining efficient operations and timely responses.

Unlicensed frequencies are not approved for two-way communication. FCC license coordination shall be managed by UTA.

Additional fixed radio channels (repeaters) shall be implemented at existing UTA sites, as necessary to support additional channel loading at the time of implementation.

Actual test measurements of coverage shall be conducted as required.

14.12.1 Two-Way Radio

Two-way radio communications is mandatory for coordination between bus/train operators, Maintenance of Way (MOW) personnel, and the control center. This requirement shall be met using the currently deployed and most recently installed radio system configuration. Any new systems introduced shall be fully compatible with existing radio systems.

Voice radio communications will adhere to the most recently installed radio system configuration approved by UTA Information Systems. Radios specifications shall be defined by UTA Information Systems in coordination with rail operations. A procurement contract shall include commissioning, technical support, and training. Field construction such as antenna installation and base station site provisions shall be covered under separate work.

The radio system will provide critical voice communications to field personnel, therefore the system shall provide push-to-talk communications anytime and anywhere within the area of operation. This push-to-talk feature shall function uniformly across all BRT, light rail, and commuter rail sites, especially for 'all group' calls. The system shall also support full duplex interconnectivity, fixed/mobile data services, and alphanumeric paging.

CRT Specific Criteria:

- The procurement contract for cab cars and locomotives shall include furnishing train radios that comply with this document's requirements.
- Radios shall be installed under UTA supervision, with prototype tests required for new or modified units.
- Critical aspects include mechanical installation, cabling, power supply, cab controls, antenna, interfacing with the signal system, cable transmission system, and the software changes needed to integrate the CRT system with UTA's existing radio dispatching system.

The RCC requires two identical communications workstations providing integrated control of telephone, intercom, and radio channels. Incoming calls will be displayed on a color monitor, with channel selection through a radio-controlled mouse, keyboard, or touch screen. All communications to the control center shall be digitally recorded.

Radio coverage along the alignment shall enable a two-watt portable radio to be heard with 20 dB quieting at the CCF along 98% of the alignment 99% of the time. "Dead sections" longer than 100 feet with less than 20 dB quieting, shall not be allowed.

14.12.2 Vehicle Radios

Each vehicle cab across all transit modes will be equipped with a Mobile Data Device (MDD) control head and necessary radio equipment, including antennas, transmission lines, and power supplies.

A speaker shall permit the operator to monitor all radio conversation at the discretion of the dispatcher. A handset, when lifted, shall be used for talking and listening.

The mobile radio equipment shall be installed in the vehicles after UTA acceptance of the vehicles.

LRT Specific Criteria:

To accommodate both current and future communication needs, a conduit or duct pathway shall be established through the articulated section of each light rail vehicle. This pathway shall be sufficiently large to house up to six eight-strand copper or fiber optic communication cables.

CRT Specific Criteria:

Only the radio in the active cab will be operational.

14.12.3 Mobiles and Portable Radios

Mobile and portable radio units shall be easy to use and will require minimal operator training. These radios shall operate in accordance with all current and anticipated features required in the vehicle mounted radios. This includes, but is not limited to, full duplex interconnect, and push-to-talk.

14.13 Rail Transit Communications

14.13.1 Wayside Communications Equipment

Wayside communications equipment shall be installed in an environmentally controlled room, house, or communication cabinets, unless constraints in the ROW prevent such installations. The specific guidelines for these installations are as follows:

- In cases where communications equipment is installed in equipment rooms, both the equipment and all cross-connect panels shall be of a modular design.

- Each room or house designated for communications equipment shall be sized to not only accommodate all necessary equipment for a fully operational system but also provide space for future expansion.
- The placement of communications houses and enclosures shall be strategically chosen to avoid obstructing the view of train operators, motorists, or pedestrians. This is crucial for maintaining clear visibility of trains for safety purposes.

14.13.2 Central Control System (CCS) and SCADA Remote Terminal Units (RTUs)

The CCS comprises various subsystems including the train control system, Fire/Life/Safety system, and communications systems. These communications systems include but not limited to radio, phones, CCTV, as well as access control and intrusion detection systems.

The CCS and SCADA systems shall operate cohesively to provide a homogeneous control system. This system will relay indications from field equipment to the dispatcher at the OCC and facilitate control commands from the OCC dispatcher to the field equipment. Essential elements of the system, including control center servers, displays, workstations, and Human Machine Interface (HMI), shall be fully compatible.

Modifications to the CCS/SCADA subsystem shall ensure safety at all times. Under no circumstances shall user actions, inactions, or equipment malfunctions of the CCS/SCADA subsystem lead to unsafe conditions. The design shall ensure that, in the event of the CCS/SCADA subsystem becoming inoperative, the UTA commuter rail system will continue to operate safely in a fail-safe mode.

Operational protocols for the CCS and SCADA RTUs include:

- The CCS shall typically function autonomously, except for routine service requirements of hard copy and external magnetic storage peripherals.
- SCADA RTUs are designed to operate unattended.
- In case of RTU failures, the CCS equipment shall maintain operation, automatically resuming normal monitoring and management upon the equipment's return to service.

14.14 CRT Communications

14.14.1 Fire and Intrusion Detection System Alarms

14.14.1.1 Fire and Intrusion Control

The installation of a Fire and Intrusion (F&I) system may be considered either in the initial phase or later phases of the commuter rail project. This system is intended to provide SCADA with indications of facility status, such as being armed or disarmed, zone faults, system faults, etc. At a minimum, infrastructure including conduits and other necessary features shall be prepared to facilitate the future installation of this system.

In the design of the Fire and Intrusion (F&I) system, the following criteria shall be met to ensure effective integration and functionality:

- Arming and Disarming Capabilities: The system shall be designed to be armed and disarmed both through a local control panel and remotely via the SCADA system. This dual capability ensures operational flexibility and enhanced security management.
- Status Monitoring and Display: The design shall include features for logging the status of the system's armed state and the entry door state (open/closed). These statuses shall be graphically displayed by the SCADA system, providing clear and immediate information to the operators.
- Alarm Initiation: The system shall be designed to initiate an alarm locally at each passenger station and at the Central Control Facility (CCF) upon detecting a rise in temperature, manual activation of a fire alarm, products of combustion (such as heat or smoke), or intrusion at any site. This ensures prompt response to potential fire and security breaches.
- Independent Operation: Each communications room/house shall have an F&I system with its own battery back-up system and automatic cutover circuitry. This design criterion ensures that the system remains operational even in the event of power failures, maintaining continuous surveillance and security.

14.14.1.2 Intrusion Alarms

Intrusion detectors are required to be specifically designed for protecting communications rooms/houses, signal houses, TVMs, and other locations as specified by UTA. The key design criteria for these intrusion detectors include:

- Local and Central Alarm Notifications: The system shall trigger an alarm both locally and at the CCF to promptly alert dispatchers of any unauthorized entry or tampering. This dual notification ensures immediate awareness and response.
- Integration with SCADA System: Intrusion alarms shall be connected to the SCADA system. This integration shall provide both audible and visual indications, clearly conveying the nature and urgency of each alarm.
- Activation and Deactivation Protocol: The system shall be designed to utilize code activation and deactivation, adding an additional layer of security and control over the intrusion alarm system.
- Door Monitoring: Proximity switches shall be employed for monitoring doors. This feature enhances the system's ability to detect and report unauthorized access or tampering.

14.14.1.3 Fire Alarms

The fire alarm system shall be designed and installed in compliance with the NFPA standards. Key elements of the fire alarm system include:

- Heat Detector Installation: Heat detectors shall be installed in accordance with relevant codes in all communication rooms/houses and specific rooms at passenger stations. These installations are crucial for early detection of potential fire hazards.
- SCADA System Integration: The fire alarm system shall be integrated with the SCADA system. This integration is essential for transmitting fire alarm information promptly to the Central Control Facility (CCF).

14.15 Communications Power and Raceway

This section details power and raceway requirements that shall complement other electrical and raceway stipulations in this manual. These requirements shall be exclusively dedicated to the Communications System elements, including the safety and security equipment specified in Section 14.2.

14.15.1 Communications Raceway

The communications raceway shall provide distinct paths for both power and data cabling throughout transit facilities and associated parking areas, leading to communications equipment. This includes connections to station and parking lot communication devices, TVMs, and other fare collection devices. The communications raceway shall adhere to the following:

- Communications cabling shall be segregated from power cabling within conduits, pull boxes, handholes, manholes, light poles, and structures.
- Designers shall detail conduits, which shall be furnished and installed by the respective contractor.
- All conduits shall be labeled, documented within an as-built plan set, and equipped with a pull rope.

14.15.2 Communications Power

Electrical devices and fixture placement will be unique for each site and shall be coordinated and approved by UTA.

The power needs for each site shall be individually evaluated.

All necessary transformers, electric panels, and appurtenances shall be designed according to the unique needs of each site and coordinated with the respective power utility company.

For additional requirements, refer to Chapter 8 'Stations and Stops', Section 8.6.2 'Fare Vending Equipment'.

14.16 Battery and UPS Back-up Power Supply

The communications system design shall utilize uninterruptible power supply (UPS) and battery backup equipment for all critical communication nodes and equipment. This system is essential to ensure continuous operations in the event of a loss of commercial utility power. The UPS and battery backup shall provide reliable, continuous, and intelligent power failure protection for the wide range of equipment used in the communications system.

The UPS and battery backup equipment shall include:

- Inclusion of all associated ancillary devices, such as cabling, recharging devices, monitoring circuits, power panels, breakers, and automatic power switchover devices, to provide uninterruptible essential power.
- Capability to maintain power to the equipment for a minimum of four hours in the event of a loss of commercial utility power.

END OF CHAPTER 14

DESIGN CRITERIA MANUAL

/ CHAPTER 15

FARE COLLECTION EQUIPMENT

Table of Contents

CHAPTER 15 FARE COLLECTION EQUIPMENT 1

15.1 GENERAL 1
15.1.1 Conditions of Service 1
15.2 HANDICAPPED ACCESSIBILITY 2
15.3 ADDITIONAL DESIGN CRITERIA 3
15.3.1 Power Supply 3
15.3.2 Mounting 4
15.3.3 Fare Collection Communications 4

CHAPTER 15 FARE COLLECTION EQUIPMENT

15.1 General

This chapter provides design criteria for the placement and coordination of fare collection equipment across the UTA Light Rail Transit (LRT), Commuter Rail Transit (CRT), Streetcar, and Bus Rapid Transit (BRT) systems. Design considerations shall include:

- Coordination with UTA's Fares Department: All fare collection equipment, including Ticket Vending Machines (TVMs) and card readers, shall be coordinated with UTA's Fares Department to ensure seamless integration and operation.
- Fare Payment Methods: Patrons are required to purchase tickets and passes or use transfers for travel on these transit systems. Tickets, passes, or transfers serve as proof of fare payment, enabling a barrier-free fare control system throughout the UTA Transit System.
- Off-Board Fare Collection: Fare collection shall occur off-board, with no fares or currency collected on-board the transit vehicles. This approach streamlines the boarding process and improves operational efficiency.
- Placement of TVMs: Self-service TVMs shall be strategically located on access routes to or on station platforms. The placement of these machines shall be such that they are easily accessible to passengers.
- Card Readers with NFC Technology: In addition to TVMs, card readers equipped with Near Field Communications (NFC) technology shall be installed on station platforms. These readers shall facilitate contactless payment using Smart Card credit cards, employee cards, and student ID cards.
- Tap-On, Tap-Off System: The card readers shall enable a Tap-On, Tap-Off system, allowing riders to seamlessly switch between different modes of UTA transportation. The backend configuration of these readers shall support this functionality, enhancing the overall user experience.

These design criteria ensure that fare collection equipment is effectively placed and integrated, offering convenient and efficient payment options for UTA Transit system users.

15.1.1 Conditions of Service

The installation and operational conditions for TVM and Card Reader equipment across the LRT, Streetcar, and BRT platforms, as well as Commuter Rail Transit (CRT), are outlined as follows:

- Installation Locations:

    - For LRT, Streetcar, and BRT: TVM and Card Reader equipment shall be installed on station platforms.
    - For CRT: TVM equipment may be positioned on approach walkways, near platforms, or directly on station platforms, as directed by UTA. CRT Card Readers shall be specifically installed on platforms.
- Operational Conditions:
    - The equipment shall be capable of satisfactory operation in local ambient conditions.
    - TVM screens should be oriented to avoid direct sunlight to ensure visibility and usability.
    - TVMs shall be sheltered from direct overhead sunlight, ideally placed under canopies or shelters. This setup shall include adequate lighting and CCTV cameras.
    - CCTV cameras shall be positioned to provide a clear view of the TVM screen, enhancing security and monitoring.
    - Selected locations should accommodate a minimum of two TVMs with card readers to their sides and at least two additional Card Readers placed strategically for optimal traffic flow.
- Environmental and Safety Considerations:
    - All facilities shall be designed to accommodate the safe storage and/or removal of snow, melting snow, and ice, ensuring continued operability and safety under varying weather conditions.
    - All facilities shall be designed to accommodate safe storage and/or removal of snow, melting snow, and ice.

15.2 Handicapped Accessibility

Locations for TVMs and Card Readers across the UTA transit system shall comply with the 2010 ADA Standards for Accessible Design.

In accordance with the 2010 ADA Standards, fare collection equipment shall comply as follows:

- Accessible Route and Location:
    - Each machine shall be situated on an accessible route to the station or located directly on the platform.
- Control Accessibility:
    - User activation controls shall comply with Sections 304 through 307 of the 2010 ADA Standards and any subsequent adopted revisions. Key requirements include:
        - Clear Floor Space: Adequate clear floor space for parallel wheelchair approach shall be provided at controls, dispensers, receptacles, and other operable equipment.

        - Size and Approach: The minimum clear floor or ground space required for a stationary wheelchair and occupant is 30 inches by 48 inches. This space may be positioned for forward or parallel approach. Additionally, a turning space with a minimum diameter of 60 inches shall be provided.
        - Maneuvering Clearance: One full unobstructed side of the clear floor or ground space for a wheelchair shall adjoin or overlap an accessible route or adjoin another wheelchair clear floor space.
- Reach Ranges:
    - The highest operable part of the controls, dispensers, receptacles, and other operable equipment shall be within one of the reach ranges specified in Section 308 of the 2010 ADA Standards and subsequent adopted revisions:
        - Forward Reach: If the clear floor space only allows forward approach to an object, the maximum high forward reach allowed shall be 48 inches. The minimum low forward reach is 15 inches.
        - Side Reach: If the clear floor space allows parallel approach by a person in a wheelchair, the maximum high side reach allowed shall be 54 inches and the low side reach shall be no less than 9 inches.
- Operable Controls:
    - Controls and operating mechanisms shall be operable with one hand without the need for tight grasping, pinching, or twisting of the wrist. The force required to activate controls shall not exceed 5 pounds in accordance with Section 309 of the 2010 ADA standards and subsequent adopted revisions.
- Information Accessibility:
    - Instructions and usage information shall be accessible and independently usable by persons with vision impairments.

15.3 Additional Design Criteria

15.3.1 Power Supply

- Fare collection equipment shall be designed to operate on primary power sourced from a single-phase, 120-Volt, 60-Hertz service in accordance with the requirements of NEC.
- The equipment shall accommodate a voltage variation of +10% and –15%.
- Power connections shall be designed to enter the base of the equipment, ensuring a neat and safe installation.

- Warning decals and labels installed inside the TVM doors to warn of high voltage and sensitive components.

15.3.2 Mounting

- Each type of fare collection equipment, including TVMs and Card Readers, shall come with an appropriate base. This base may be integral to the unit or provided as a separate pedestal.
- The base shall be suitable for secure mounting to a concrete footing or floor, ensuring stability and durability in various installation environments.

15.3.3 Fare Collection Communications

A fiber optic network shall connect all TVMs and Card Readers on station platforms to a central fare collection server located at UTA Headquarters.

The server shall support workstations tasked with monitoring and controlling functions. These functions include, but are not limited to, credit card transaction processing, revenue administration, and maintenance operations.

For detailed criteria regarding the fiber optic network and associated components, refer to:

- Chapter 14 'Communications', Section 14.3.2 'Station I.T. Data Fiber Optic Cable'.
- Chapter 8 'Stations and Stops', Section 8.6.11.5 'Communication and Power Conduits'.

END OF CHAPTER 15.

DESIGN CRITERIA MANUAL

/ CHAPTER 16

CORROSION CONTROL

Table of Contents

CHAPTER 16 CORROSION CONTROL 1

16.1 General 1
16.1.1 Electric Bus Charging 1
16.2 Scope 2
16.3 Standards and Codes 2
16.4 Pre-Design Survey and Testing 4
16.5 Soil and Water Corrosion Control 4
16.5.1 Materials of Construction 6
16.5.2 Safety and Continuity of Operations 7
16.5.3 Accessibility of Installations 7
16.5.4 Special Considerations 7
16.5.5 Protective Coatings 7
16.5.6 Cathodic Protection 11
16.6 Stray Current Corrosion Control 12
16.6.1 Baseline Corrosion Survey 14
16.6.2 Baseline Stray Current Survey 14
16.7 Trackwork 15
16.7.1 Ballasted Track Construction 16
16.7.2 Embedded Track Construction 16
16.7.3 Vehicle Grade Crossing and Pedestrian Crossing Track Construction 16
16.7.4 Direct Fixation Track Construction 16
16.7.5 Maintenance Shops and Yard 16
16.7.6 Special Trackwork and Hardware 17
16.7.7 Hardware 17
16.7.8 Track-to-Earth Resistance Testing 17
16.8 Traction Power Facilities and Substations 17
16.8.1 Traction Power Substations 17
16.8.2 Overhead Contact System 18
16.8.3 Negative Distribution System 19
16.8.4 Resistance-to-Earth Criteria 19
16.9 Utility Structures 20
16.9.1 Facilities Owned by Others 20
16.9.2 Bridge Structures 22
16.10 Atmospheric Corrosion Control 23
16.10.1 Scope 23
16.11 Grounding 26
16.11.1 Scope 26
16.11.2 Design and Coordination of Grounding Systems 26

CHAPTER 16 CORROSION CONTROL

16.1 General

This chapter provides the design basis for corrosion control measures to be incorporated at all design stages. The overall goal is to prevent premature corrosion failure, minimize stray current on underground structures, and ensure economical installation, operation, and maintenance. The corrosion control design aims to monitor, measure, and provide protection where required.

Corrosion control designs shall be coordinated to avoid conflicts and the risk of one measure rendering another ineffective. Corrosion control shall be interfaced and coordinated with other engineering disciplines and designs. These include utility, mechanical, civil, structural, electrical, trackwork, traction electrification, environmental, geotechnical, architectural, signals, communications, and safety and security designs.

16.1.1 Electric Bus Charging

The potential impact of wireless power transmission, intended for charging electric vehicles, on underground metallic utilities and infrastructure is not widely documented. Based on current technology, it is feasible that charging stations located adjacent to buried underground utilities could have an adverse impact as a result of stray current interference.

16.1.1.1 Site Evaluation and Design

Prior to the installation of charging station infrastructure, a comprehensive site evaluation shall be performed. This evaluation should encompass:

- Assessment of Soil Resistivity: Determine the soil's electrical resistance, which is vital for designing an effective grounding system.
- Identification of Potential Hazards: Identify any nearby power lines or underground utilities that may influence grounding effectiveness or be affected by stray currents.
- Proximity to Underground Utilities: Ensure that new facilities are strategically located to avoid interference with underground utilities susceptible to stray current impacts.

Following the site evaluation, a design plan should be developed, focusing on:

- Dedicated Grounding System: Establish a grounding system exclusive to the charging station, connecting all conductive components. Utilize grounding electrodes (such as rods, plates, or grids) made of conductive materials like copper or galvanized steel. These electrodes shall be adequately distributed near the charging infrastructure to ensure safe dissipation of electrical faults.
- Equipotential Bonding: Bond all metallic, non-current-carrying components to create an equipotential zone. This practice mitigates potential differences and reduces electrical hazards, also aiding in the prevention of corrosion due to stray currents.
- Sizing of Grounding Conductors: The grounding conductors shall be properly sized based on the electrical load of the charging station, ensuring they can safely carry any fault currents.
- Use of High-Quality Electrical Components: Implement electrical components, including cables, connectors, and grounding systems, specifically designed for charging infrastructure. These components should be tested to verify their reliability and effectiveness.

By adhering to these guidelines, the installation of charging station infrastructure will be safe, effective, and resilient, minimizing electrical hazards and corrosion risks while providing reliable service.

16.2 Scope

Three types of corrosion control shall be implemented as part of all transit projects: soil and water corrosion control, stray current corrosion control, and atmospheric corrosion control. The design criteria for each of these categories, and their implementation, shall meet the following objectives:

- Realize the design life of system facilities by avoiding premature material deterioration or failure caused by corrosion.
- Minimize annual operating and maintenance costs associated with material deterioration.
- Provide continuity of operations by reducing or eliminating corrosion related failures of infrastructure.
- Minimize or eliminate detrimental effects to facilities belonging to others, as may be caused by stray earth currents from transit operations.

16.3 Standards and Codes

The design of stray current and corrosion control measures shall conform to, but not be limited to, the latest edition of the following standards, codes, guidelines, and design criteria:

- American Standards for Testing Materials (ASTM):
  - ASTM G165-99 Standard Practice for Determining Rail-to-Earth Resistance
  - ASTM G57-20 Standard Test Method for Measurement of Soil Resistivity Using the Wenner Four-Electrode Method
- The Association for Materials Protection and Performance (AMPP), formerly NACE International:
  - NACE SP-0169 Control of External Corrosion on Underground or Submerged Metallic Piping Systems
  - NACE SP-0177 Mitigation of Alternating Current and Lightning Effects on Metallic Structures and Corrosion Control Systems
  - NACE SP-0188 Discontinuity (Holiday) Testing of New Protective Coatings on Conductive Substrates
  - NACE RP-0274 High Voltage Electrical Inspection of Pipeline Coatings Prior to Installation
- National Fire Protection Association (NFPA):
  - NFPA 70 National Electric Code (NEC)
- American Water Works Association (AWWA):
  - AWWA C217 Cold-Applied Petrolatum Tape and Petroleum Wax Tape Coatings for the Exterior of Special Sections, Connections, and Fittings for Steel Water Pipelines
  - AWWA C222 Polyurethane Coatings for Interior and Exterior of Steel Water Pipe and Fittings
- Steel Structures Painting Council (SSPC):
  - SSPC-SP-1 Solvent Cleaning Surface Preparation
  - SSPC-SP-2 Hand Tool Cleaning Surface Preparation
  - SSPC-SP-3 Power Tool Cleaning Surface Preparation
  - SSPC-SP-5 White Metal Abrasive Blast Surface Preparation
  - SSPC-SP-6 Commercial Abrasive Blast Surface Preparation
  - SSPC-SP-10 Near White Metal Abrasive Blast Surface Preparation
  - SSPC-SP-11 Power Tool Cleaning to Bare Metal

Local and state codes may also apply. Designers shall consult these publications and provide systems in accordance with the most stringent applicable code or industry practice.

16.4 Pre-Design Survey and Testing

A Pre-Design Corrosion Control Survey shall be conducted prior to the design of any UTA project. This survey is critical for assessing potential corrosion risks and ensuring the longevity and integrity of UTA facilities and equipment. The survey shall encompass the following key areas:

- Assessment of Corrosive Effects: The survey shall investigate potential corrosive impacts on UTA facilities and equipment. It shall also examine the effects of the electric propulsion transit installation on adjacent facilities and equipment not owned by UTA.
- Collection of Data: The survey shall include gathering existing stray current conditions, soil corrosivity, potential sources of interference from other operators' facilities, atmospheric conditions, and other factors that may affect the level of corrosion.
- Utility Information: The survey shall gather information on equipment, piping, and other fixed facility data from local utilities. This includes any corrosion mitigation techniques currently installed by those entities, as well as any special requirements concerning equipment types and installation.
- Soil Testing: Soil samples shall be tested for pH, resistivity, chlorides (ppm), and sulfates to analyze potential corrosive effects. These tests shall be conducted on 25 percent of the soil borings, equally spaced along the project length or every 500 feet, whichever is more frequent, and at each proposed TPSS building site. Soil samples shall also be taken at a pipe depth level of approximately 4 feet.
- Stray Current Investigation: Where testing reveals the presence of stray current, the survey shall investigate the source, cause, duration, and magnitude. All findings shall be thoroughly documented in the report.
- Interdisciplinary Consideration: Stray current and corrosion control measures shall consider the design requirements of other engineering disciplines specified within this manual.
- Reporting: The results of the survey shall be submitted in a report for review and acceptance by UTA prior to the design.

16.5 Soil and Water Corrosion Control

The primary goal of this design aspect is to prevent the corrosion of structures due to soil and water. The designs shall:

- Account for Design Life: Consider the impact of corrosion on achieving the specified design life objectives for buried structures.

- Mandatory Corrosion Control Provisions: Implement corrosion control measures for all facilities where failure due to corrosion may impact safety or disrupt operations.
- Evaluation of Underground Environment: Assess the corrosivity of the underground environment using data from geotechnical reports or other reliable methods. If the available information is insufficient, additional soil borings or testing shall be identified to adequately assess soil and groundwater corrosivity.

Protection of metal structures shall include:

- Corrosion Control Techniques: Use of techniques such as coating, electrical isolation, electrical continuity, and cathodic protection.
- Specifications for Concrete Structures: Identify reinforced concrete structures at risk from chlorides or sulfates and specify cement types conforming to ASTM C150. In severe environments, supplemental cementitious materials, inhibitors, or coatings may be required.

Soil and groundwater characteristics shall be determined and documented during boring surveys. Analysis of the data obtained from on-site borings shall form the basis for corrosion control designs. Soil/rock samples should be analyzed for resistivity (or conductivity), moisture content, pH, chloride, sulfate ion concentrations, and the presence of sulfides.

Normally, structures in conditions listed below shall be protected against the environment by coating, insulation, electrical continuity, and/or cathodic protection, whichever is applicable. Structures typically affected by soil and water corrosion include, but are not limited to:

- Buried and on-grade reinforced concrete structures.
- Buried and on-grade steel and metal structures and parts.
- Pier and pile structures.
- Ferrous piping (water, fire, sewage, etc.).
- Hydraulic elevator cylinders.
- Underground storage tanks.
- Steel trackwork.
- Electrical conduits.
- Copper piping.

Consideration of corrosion control measures for facilities owned by others should be included in the design. Coordinate with the owners of these facilities to avoid conflicts, such as interference with their cathodic protection systems.

16.5.1 Materials of Construction

In the construction of UTA projects, careful consideration shall be given to the materials used, especially in relation to their susceptibility to corrosion. The following guidelines shall be adhered to:

- Piping and Conduit Material: All pressure and non-pressure piping and conduit shall be non-metallic, unless the use of metallic materials is necessitated by specific engineering purposes. The selection of non-metallic materials shall be based on an evaluation of their physical characteristics, compliance with local requirements and codes, manufacturer's recommendations, environmental conditions, performance history, expected life, failure modes, and costs.
- Metallic Fittings and Appurtenances: In cases where metallic fittings and appurtenances are used in conjunction with non-metallic piping, they shall be considered for corrosion protection measures.
- Restriction on Aluminum Use: Aluminum and aluminum alloys shall not be used in direct burial applications due to their high susceptibility to corrosion in such environments.
- Criteria for Non-Native Fill: If non-native fill is to be used for backfilling concrete or ferrous structures, it shall meet the following criteria:
    - pH between 6 to 8.
    - Maximum chloride ion concentration of 250 ppm.
    - Maximum sulfate ion concentration of 200 ppm.

Use of fill material not meeting these criteria may be acceptable only after review and approval by UTA.

- Design of Reinforced Concrete Structures: The design shall consider corrosion risks and at a minimum, incorporate the following requirements:
    - A minimum concrete cover of 2 inches on the soil side of all steel reinforcement where concrete is poured within a form, or a minimum of 3 inches cover where the concrete is poured directly against soils.
    - Selection of cement type should be based on pH and sulfate concentration to ensure compatibility and durability in the given environmental conditions.

16.5.2 Safety and Continuity of Operations

Corrosion control protection shall be required for those facilities where degradation or failure of such facilities caused by corrosion may affect safety or interrupt the continuity of system operations.

16.5.3 Accessibility of Installations

Permanent test facilities installed with certain corrosion control provisions shall be accessible post-installation and labeled to allow for periodic maintenance and monitoring.

16.5.4 Special Considerations

The installation of corrosion control measures for facilities owned by others, but designed as part of the transit project, shall be coordinated through UTA or its representative and the facility's owner. This coordination shall aim to resolve design and construction conflicts and minimize the impact on other system elements. UTA's corrosion control measures will be utilized unless the facility owner requires specific measures.

16.5.5 Protective Coatings

Coating systems play a critical role in protecting UTA structures from corrosion. These systems are applicable for both atmospheric exposure and buried or immersed conditions. The following guidelines shall be followed:

- Coating Selection: The designer shall select coatings based on various factors, including the type of exposure (environmental, chemical, and physical), aesthetics, safety considerations (such as slip resistance), corrosion protection properties, and compatibility with other corrosion control methods.
- Shop-Applied Coatings: Coatings shall preferably be shop applied wherever possible. The design shall also include compatible coating systems for field touch-up and repairs. The corrosion control design shall specify the surface preparation requirements (including cleanliness and surface profile), coating application procedure, coating system description, number of coats, minimum dry film thickness for each coating system, and QA/QC (Quality Assurance/Quality Control) requirements.
- Atmospheric Exposure Considerations: When selecting coatings for atmospherically exposed structures, considerations should include appearance factors such as color, sheen, and graffiti resistance.
- Buried Metallic Structures: Metallic structures that are buried shall be provided with a bonded dielectric protective coating to prevent corrosion.

- Restriction on Polyethylene Encasement: The use of polyethylene encasement is prohibited for structures where cathodic protection will be applied.

16.5.5.1 Electrical Insulation of Piping

For corrosion control purposes, devices used as electrical insulators shall include nonmetallic inserts, insulating flanges, couplings, unions, and/or concentric support spacers. These devices shall meet the following criteria:

- Electrical Resistance: Devices shall have a minimum resistance of 10 mega ohms prior to installation. After insertion into the operating piping system, they shall exhibit sufficient electrical resistance, ensuring that no more than 2 percent of a test current applied across the device flows through the insulator. This includes flow through conductive fluids, if present.
- Mechanical and Temperature Ratings: Devices shall have mechanical and temperature ratings equivalent to the structure in which they are installed.
- Internal Coating: Except for complete non-metallic units, devices shall be internally coated with a polyamide epoxy for a distance on each side of the insulator equal to twice the diameter of the pipe in which they are used. In cases where conductive fluids with a resistivity of less than 2,000 ohm-centimeters are present, internal coating requirements shall be determined based on a separate evaluation.
- Protective Coating for Buried Devices: Devices (except non-metallic units) buried in soils shall be protected with a suitable protective coating.
- Protective Coating in Humid or Partially Immersed Environments: Devices (except non-metallic units) installed in chambers (vaults, manholes, etc.) or exposed to partial immersion or high humidity shall have a protective coating applied over all components.
- Test Facilities for Inaccessible Devices: Inaccessible insulating devices, such as those buried or elevated, shall be equipped with accessible permanent test facilities.
- Clearance Requirements: A minimum clearance of 12 inches shall be provided between new and existing metallic structures. Where conditions do not allow a 12-inch clearance, the design shall include special provisions to prevent electrical contact with existing structures.

16.5.5.2 Electrical Continuity of Piping

Electrical continuity shall be provided for all non-welded metallic pipe joints. The following guidelines shall be adhered to:

- Bonding Material and Attachment: Bonds for electrical continuity shall be made using insulated copper cables, or other approved materials, attached by exothermic welds. The bond cables shall be sized to ensure that the total resistance of the pipeline circuit does not exceed 120 percent of the theoretical resistance of the pipeline. All exothermic welds and uninsulated bond cables shall be appropriately coated for protection.
- Criteria for Electrical Continuity Bonds:
    - Material: Use direct burial, insulated, stranded copper wire of the minimum length necessary to span the joint being bonded.
    - Wire Sizing: The wire size shall be determined based on the electrical characteristics of the structure and the resulting electrical network. This sizing is crucial to minimize attenuation and to ensure the effectiveness of cathodic protection.
    - Redundancy: A minimum of two wires per joint shall be used for redundancy, enhancing reliability.
    - Welding: Continuity bonds shall be insulated copper wire, or as specified by the designer, and shall be exothermically welded to the piping to ensure a strong and reliable connection.

16.5.5.3 Ferrous Pressure Piping

All new buried cast iron, ductile iron, and steel pressure piping shall be cathodically protected. The system design shall adhere to the following minimum design criteria:

- Protective Coating: Apply a protective coating to the external surface of the pipe to prevent direct exposure to corrosive elements.
- Electrical Insulation: Ensure electrical insulation of the pipe from interconnecting pipes, other structures, and segregate into discrete electrically isolated sections. The extent of segregation will depend on the total length of the piping.
- Electrical Continuity: Maintain electrical continuity by installing bond wires across all mechanical pipe joints, excluding those that serve as intended insulators.
- Permanent Test/Access Facilities: Install permanent test and access facilities at all insulated connections to verify electrical continuity, assess the electrical effectiveness of insulators and coating, and evaluate cathodic protection levels. Additional test/access facilities shall be installed at intermediate locations, either at intervals not greater than 200 feet or at greater intervals as determined by the designer based on the requirements of the individual structure.
- Test Facility Requirements: Test facilities shall utilize stationary copper-copper sulfate reference cells, corrosion coupons, and other necessary equipment as determined by UTA.

16.5.5.4 Copper Piping

Buried copper pipe shall be electrically isolated from buried and non-buried ferrous piping, such as that in station structures, by using an accessible insulating union where the piping enters through a wall or floor. Pipe penetrations through walls and floors shall be electrically isolated from the building's structural elements. The insulator should be located inside the structure, not buried.

16.5.5.5 Gravity Flow Piping (Non-Pressured)

For corrugated steel piping or other non-pressurized metallic pipes:

- Coating Requirements: These pipes shall be internally and externally coated. The coating shall include a sacrificial metallic layer and a protective organic coating.

For cast or ductile iron piping:

- Internal Lining and External Coating: Cast or ductile iron piping shall be designed and fabricated to include an internal mortar lining and a bonded exterior coating.
- Dielectric Coating: A bonded dielectric coating, providing mechanical protection, shall be applied on the external surfaces of the pipe. This coating shall extend 12 inches on each side of any concrete/soil interface.

For reinforced concrete non-pressure piping:

Reinforced Concrete Non-Pressure Piping. Reinforced concrete non-pressure piping shall include the following provisions:

- Water/Cement Ratios: The water/cement ratios shall meet the minimum provisions of the AWWA and as required by the soil conditions.
- Chloride Concentration: The total concrete mix (including mixing water, cement, admixture, and aggregates) shall have a maximum chloride ion concentration of 250 ppm.

16.5.5.6 Corrugated Steel Pipe

Galvanizing, both interior and exterior, shall have a combined minimum thickness of 2.0 ounces per square foot of coated surface (both interior and exterior). Protective coatings on the internal and external surfaces shall be suitable for application over galvanizing and provide corrosion protection suitable for the intended environment.

The performance characteristics of the coatings shall have a proven performance record in the intended service and meet the specifications set by the designer.

16.5.5.7 Electrical Conduits

Buried metallic conduits shall adhere to the following provisions to ensure durability and effective functionality:

- Coating Requirements: Galvanized steel with PVC or another coating approved for direct burial, with a minimum thickness of 10 mils, including for couplings and fittings. PVC coating is not required where conduits are embedded in concrete.
- Electrical Continuity: Ensure electrical continuity by using standard threaded joints or by installing bond wires across non-threaded joints.

16.5.6 Cathodic Protection

Cathodic protection systems shall be designed by a Corrosion Engineer, accredited as an AMPP Cathodic Protection Specialist or a Professional Engineer with a minimum of 5 years of corrosion experience. The Corrosion Engineer shall determine the type of cathodic protection system required for the application to meet the intended design life.

All new, replaced, or relocated utility piping shall be protected from corrosion in conformance with the requirements of each utility. At a minimum, test wires shall be installed for future testing.

Cathodic protection is mandatory for all new buried metallic pressure piping and storage tanks. This includes:

- Application of a protective coating to the external surfaces of the metallic structure.
- Electrical insulation/isolation from interconnecting piping and other structures, and separation into discrete electrically insulated/isolated sections depending on the total length of the piping.
- Electrical continuity through the installation of insulated bond wires connected across all mechanical joints other than intended insulators.
- Permanent test/access facilities for verifying continuity and effectiveness of isolation and coating, and evaluating protection levels, installed at all insulated connections and at intervals as determined by the designer.
- Installation of sacrificial anodes or impressed current anodes and rectifier units.

Cathodic protection shall be achieved using sacrificial galvanic anodes to minimize corrosion interaction with other underground utilities and the environment. Impressed current systems shall be used only where sacrificial systems are not technically and/or economically feasible. Cathodic protection plans that propose connecting to the transit system's negative return system, instead of using a separate isolated anode ground bed, shall not be permitted. Cathodic protection system design shall consider the following parameters:

- Estimated percentage of bare surface area (minimum 1 percent).
- Cathodic protection current density (minimum of 1.0 mA/ft^2 of bare surface area).
- Estimated current output per anode.
- Estimated total number of anodes, their size, and spacing.
- Minimum anode life of 25 years (with a minimum 50 percent efficiency).
- Estimated resistance of the anode ground bed.

The calculated anode life shall not be less than the structure's design life objectives, particularly where periodic anode replacement is not feasible. Impressed current rectifier systems shall be designed with variable voltage and current output rectifiers. These rectifiers shall be rated at a minimum of 50 percent above the calculated operating levels. This is to accommodate potential scenarios such as higher-than-anticipated anode ground bed resistance, lower-than-anticipated coating resistance, or the presence of interference mitigation bonds. Other conditions that may lead to increased voltage and current requirements shall also be considered.

Test facilities shall include a minimum of two structure connections, one reference electrode connection, conduits, and termination boxes. These facilities shall be designed to enable initial and periodic testing of cathodic protection levels, interference currents, and system components, which include anodes, insulating devices, and continuity bonds. The designer shall specify the locations and types of test facilities for each cathodic protection system.

16.6 Stray Current Corrosion Control

The primary aim of stray current control is to reduce or limit the level of stray earth currents at their source, specifically within the LRT rail system. This approach focuses on source reduction rather than attempting to mitigate the potentially detrimental effects that may occur on LRT facilities and other underground structures impacted by LRT operations. The designs shall be geared towards mitigating detrimental effects on facilities caused by stray direct currents and earth currents emanating from adjacent structures or facilities owned by others.

Stray current control shall be based on the following principles:

- Increasing Conductivity: Enhance the conductivity of the return circuit to reduce stray current leakage.
- Increasing Resistance: Increase the resistance between the return circuit and the earth, as well as between the earth and underground metallic structures.
- Baseline Survey: Develop a stray current baseline survey along the proposed LRT route prior to construction to monitor and evaluate the effectiveness of the corrosion control system and operational changes.

The basic requirements for effective stray current control include:

- Isolation of Power Circuits: Operate the LRT/Streetcar mainline system without direct or indirect electrical connections between the positive or negative traction power distribution circuits and the earth.
- Limiting Stray Earth Currents: Design the traction power facilities and/or the trackwork to ensure that stray earth currents emanating from the LRT/Streetcar system during normal operations do not exceed 100 milliamps per 1000 feet (0.5 Amps per mile) of track (two rails).
- Accessible Test Facilities: Provide test facilities capable of monitoring stray current activity on all potentially impacted metallic structures.
- Protection of Underground Utilities: Implement design considerations for the protection of underground metallic utilities, including electrical continuity, protective coating, cathodic protection, and appropriate monitoring facilities, unless specified or designed differently by the utility owner.
- Use of Non-Metallic Materials: Where feasible, utilize non-metallic materials in areas where stray current may be encountered.
- Utilization of Survey Data: The designer shall use data from the Baseline Corrosion Control Survey Report or other relevant sources.
- Periodic Testing: Conduct regular rail-to-earth resistance testing and stray current monitoring after the LRT system begins revenue service.

The stray current control measures shall be integrated into the design of various system elements, including the vehicle service facility, traction power system, trackwork, reinforced concrete structures and walls, metallic pipes, and utility systems. The application of protection measures aims to control stray current within acceptable levels, as determined during the design process. Recording baseline stray current data shall be obtained prior to energizing the LRT system. This data is necessary to ascertain the effects/magnitude of stray currents, if present, on existing utility installations where deemed necessary, and to provide a documented reference for future investigations.

For yards and shops, corrosion control shall include rail isolation measures separate from the mainline track, and for all ties and asphalt/concrete embedded rail.

Stray current control designs shall provide a means to mitigate and monitor stray current activity produced by the LRT system or by other sources on buried and embedded metallic structures. The basic requirements for stray current mitigation and monitoring control include:

- Design of Underground Metallic Utilities: Utilities owned or maintained by UTA should incorporate electrical continuity, protective coating, cathodic protection, and appropriate monitoring facilities. Non-pressurized underground metallic utilities will be evaluated individually for stray current mitigation needs.
- Reinforcement Electrical Continuity: Establish electrical continuity in steel reinforcement within cast-in-place concrete structures through selective welding or mechanical coupling of reinforcing bars, as required for stray current mitigation.
- Test Facilities: Implement accessible test facilities to monitor stray current activity on bonded reinforcement during revenue operations.

16.6.1 Baseline Corrosion Survey

Proposed new rail alignments or track construction projects shall be surveyed to identify existing corrosion control measures for utilities, buildings, equipment, direct current transit system facilities, and other structures along the corridor. Field testing, considered necessary by the Corrosion Engineer, may be performed in areas of high concern.

The survey information shall include the type of facility, its relative location to the alignment, the name of the facility and its owner, and any existing corrosion control measures. This information shall be compiled and stored in a database or spreadsheet format. It shall be thoroughly reviewed and considered before implementing any stray current or corrosion control measures.

16.6.2 Baseline Stray Current Survey

Prior to energizing new rail projects, a Baseline Stray Current Survey shall be conducted under the direction of the Corrosion Engineer. The survey aims to establish pre-revenue service conditions for adjacent utilities, structures, and UTA facilities, documenting any potential influence from the operation of the new rail system. This data will be invaluable for UTA in identifying and documenting future stray current influences or interferences, whether arising from UTA operations or those of other utilities.

Specific Baseline Stray Current Survey testing should include the following field tests, at a minimum:

- Baseline Structure-to-Earth Potential Measurements: Conducted on nearby utilities to establish a reference point.
- Cell-to-Cell Potential Testing: To detect the presence of earth currents that might affect underground utilities.
- Track-to-Earth Resistance: Measured to evaluate the electrical connection between the rail system and the earth.
- Extended Duration Datalogging: For 24 hours or longer, capturing structure-to-earth potential and cell-to-cell potential to provide a comprehensive understanding of the baseline conditions.

The survey data shall be compiled and stored in a database or spreadsheet format. This data will serve as the baseline for existing conditions prior to energizing the rail system and before implementing any stray current or corrosion control mitigation measures.

16.7 Trackwork

Trackwork shall be designed to minimize stray currents and adhere to the following stray current and corrosion control requirements. The objective is for all new tracks to be insulated from the earth using dielectric components, thereby achieving the specified rail-to-earth resistance for the type of trackwork described below:

- The mainline running rails, including special trackwork and all ancillary system connections, shall be designed to maintain a desirable in-service resistance per 1,000 feet of track (2 rails).

Table 16-1: Minimum Rail-to-Earth Resistance for Different Track Construction Types

Track Construction Type	Minimum Rail-to-Earth Resistance (ohms/1,000 feet)
At-grade ballasted track with cross-ties (wood or concrete)	500
Ballast deck aerial structures	500
Embedded track	250
Vehicle Grade Crossing and Pedestrian Crossing Track Construction	250
Direct fixation track	500
Maintenance Shops and Yard	100

16.7.1 Ballasted Track Construction

Ballasted track construction shall be designed to achieve a minimum effective in-service uniformly distributed track-to-earth resistance of 500 ohms per 1,000 feet of track (two rails). To attain this required resistance, insulated tie plates and fasteners shall be used. The ballast material should consist of non-porous hard rock, ensuring it is well-drained and free of dirt and debris. Additionally, a minimum clearance of 1 inch shall be maintained between the ballast material and the rails.

16.7.2 Embedded Track Construction

For embedded track construction, the design shall ensure a minimum effective in-service uniformly distributed track-to-earth resistance of 250 ohms per 1,000 feet of track (two rails). To achieve this resistance criterion, the insulated track shall be designed according to the following guidelines:

- Electrical Insulation: Insulation shall be provided between the rail/fastening assembly and the supporting track slab or between the supporting track slab and the ground. This shall be achieved by utilizing suitable insulating materials.
- Continuous Rail Boot: Insulation through use of a continuous rail boot shall be provided.

16.7.3 Vehicle Grade Crossing and Pedestrian Crossing Track Construction

Panelized track construction shall be designed to achieve a minimum effective in-service uniformly distributed track-to-earth resistance of 250 ohms per 1,000 feet of track (two rails). This resistance requirement shall be met by employing an appropriately designed insulated track, which includes the use of a continuous insulating rail boot.

16.7.4 Direct Fixation Track Construction

Direct fixation track construction shall be designed to maintain a minimum effective in-service track-to-earth resistance of 500 ohms per 1,000 feet of track (two rails). To meet this resistance criterion, the design shall include appropriately insulated track fasteners.

16.7.5 Maintenance Shops and Yard

Shop traction power shall be supplied by a separate, dedicated DC power source, electrically segregated from the mainline and yard traction power systems in both the positive and negative circuits. Shop tracks shall be

electrically grounded to the shop grounding system and electrically isolated from yard tracks using rail insulated joints. These insulating joints shall be positioned such that parked vehicles do not electrically "short" the shop and yard traction electrification systems for periods longer than necessary to move a vehicle in or out of the shop.

Maintenance Shops and Yard track construction shall be designed to achieve a minimum effective in-service track-to-earth resistance of 100 ohms per 1,000 feet of track (two rails). This resistance criterion shall be met with appropriately designed insulated track fasteners.

16.7.6 Special Trackwork and Hardware

Special Trackwork (including crossover turnouts, freight siding, and existing trackwork, etc.) shall be designed to maintain a minimum track-to-earth resistance equal to that of adjacent trackwork. The implementation of track section insulators and electrical isolation is required for new tracks and existing tracks with uninsulated or low resistance to earth features (e.g., uninsulated timber ties).

16.7.7 Hardware

Switch machines, signaling devices, communications systems, and any other devices or systems that may contact the rails shall be electrically isolated from the earth and/or insulated from the rail system. This criterion shall be achieved using dielectric materials to ensure electrical separation of these devices/systems from the earth and/or the rail system.

16.7.8 Track-to-Earth Resistance Testing

The minimum track-to-earth resistances specified for the LRT/Streetcar systems shall be measured during the construction and pre-start-up phases of the transit system. These measurements shall be conducted in accordance with ASTM G 165-99 and the results shall be submitted to UTA for acceptance.

16.8 Traction Power Facilities and Substations

16.8.1 Traction Power Substations

Traction power substations shall be strategically spaced along the mainline to ensure that track-to-earth potentials remain within safe operating levels. Each substation shall be equipped with access to the DC negative bus for stray current monitoring, which will be facilitated through the use of corrosion control junction boxes. The placement of these junction boxes should be such that they are easily accessible for personnel.

16.8.1.1 Mode of Operation

Mainline traction power substations shall operate with an ungrounded negative system. There shall be no direct electrical connections between the negative system and either the substation grounding system or any other grounded structures. Additionally, the mainline operational rectifiers shall be electrically isolated from the yard. The shop rectifier shall be grounded to the building's ground system and maintained separately from the yard rectifier.

16.8.1.2 AC Ground System

For the purpose of stray current control, the incoming AC supply neutral shall be electrically isolated from both the substation grounding system and the DC negative system.

16.8.2 Overhead Contact System

The positive distribution system shall operate as an electrically continuous bus, without any breaks, except in cases of emergency or fault conditions. Additionally, there shall be intentional electrical segregation between the yard, shop, and mainline traction power distribution systems.

16.8.2.1 Minimum Resistance-to-Earth Requirements

The positive DC power distribution circuit, which primarily includes the overhead distribution and contact system, shall maintain a minimum effective in-service resistance to earth. This resistance shall be at least 1 mega ohm per 1,000 feet of the catenary system.

16.8.2.2 Catenary System Support Poles

For catenary system support poles, specific grounding requirements are outlined to prevent the transference of stray earth currents between different parts of the transit system. These requirements vary based on the location of the poles:

- Non-Bridge Locations: For locations other than bridge structures, electrical ground facilities for adjacent catenary system support poles shall not be interconnected, to prevent the possible transference of stray earth currents from one portion of the transit system to another due to an electrically continuous ground system. Separate ground rods and a minimum of 2/0 AWG copper cable shall be provided for each catenary system support pole, except for poles on bridge structures.

- Elevated Structures Other Than Bridges: For catenary system support poles located on elevated structures other than bridges, each pole shall be grounded individually.
- Bridge Structures: For poles located on bridge structures, grounding provisions shall include interconnecting each pole to the bridge grounding system.
- Overhead Contact System (OCS) Bridge Soffit Catenary Supports: For OCS catenary supports under bridges, whether embedded or externally attached, specific provisions shall include:
    - Use of galvanized catenary support channels and hot-dip galvanized swivel pin and eyebolt.
    - Interconnection through 2/0 AWG copper grounding cable extended to ground rods.
    - Epoxy coating for catenary support hardware, concrete inserts, and studs.
    - Routing the grounding cabling in conduit with interconnections to wires from deck reinforcing steel and ground electrode system made in junction boxes.

16.8.3 Negative Distribution System

16.8.3.1 Crossbonds

The crossbonding design shall be coordinated with the guidelines set out in Chapter 12 'Electric Traction Power Supply and Distribution System,' and Chapter 13 'Signal System.' The spacing of crossbonds should not exceed 1,500 feet wherever feasible.

16.8.4 Resistance-to-Earth Criteria

For the mainline running rails, including special trackwork and all ancillary system connections, specific resistance-to-earth criteria are essential for safety and efficiency. These criteria are as follows:

- Design Resistance Requirements: The mainline running rails, including special trackwork and all ancillary system connections, shall be designed to meet the in-service resistances per 1,000 feet of track (2 rails) as specified for each track type under the Trackwork section.
- Grade Crossing Tests: Resistance-to-earth tests shall be conducted independently at grade crossings prior to welding track to adjacent track segments, especially where electrical isolation of the grade crossing is achievable.
- Increasing Resistance: Increasing resistance may be attained by use of insulating track fastening devices such as insulated tie plates, rail clips, rail boots and direct fixation fasteners.
- Monitoring and Maintenance: Rail-to-ground resistance shall be monitored both during and after construction to detect any variations or decreases in resistance. Should a low resistance reading be

detected, investigations shall be initiated immediately, and any adverse condition(s) repaired without delay. Postponing repairs could affect additional construction elements and lead to increased repair costs.

- Supplemental Measures: In areas with extensive utility installations or major high-pressure transmission pipelines, the use of supplemental insulated negative drainage return cables shall be considered.
- Electrical Isolation: All devices such as switch machines, train control installations, or other systems shall be electrically isolated from the rails using dielectric materials.

16.9 Utility Structures

All piping and conduit shall be non-metallic, unless the use of metallic facilities is necessitated by specific engineering purposes. Where non-metallic materials are used, no special provisions are required.

Metallic Facilities (System-wide):

- In Tunnels or Crawl Spaces: Pressure or non-pressure piping exposed within tunnels, crawl spaces, or embedded in concrete inverts shall not require special provisions.
- Wall Penetrations: Pressure piping that penetrates tunnel, foundation, or station walls shall be electrically insulated from both the external piping to which it connects and from watertight wall sleeves. This electrical insulation of interior piping from external piping shall occur on the interior side of the tunnel or station.

16.9.1 Facilities Owned by Others

16.9.1.1 Replacement/Relocated Facilities

Corrosion control requirements for buried utilities installed by the owner/operator as part of transit construction shall be the responsibility of the respective utility owner/operator. UTA shall coordinate with the utility owner/operator and the design engineer to determine the necessary corrosion control requirements. When guidance is requested by the utility owner/operator, minimum stray current corrosion control criteria shall be in accordance with the paragraph “Existing Utility Structures” mentioned below.

For relocated or replaced utilities installed by transit contractors as part of a contractual agreement between the transit agency and the utility, installation shall adhere to the utility owner’s specifications and include the following minimum provisions. These provisions are applicable to ferrous and reinforced concrete pressure piping. Other materials and structures will require individual review:

- Electrical continuity shall be ensured through the installation of insulated copper wires or similar materials across all mechanical joints where electrical continuity cannot be assured (refer to 16.5.5.2).
- Electrical access to the utility structure via test facilities should be installed as deemed necessary by UTA.
- The need for additional measures, such as electrical isolation, application of a protective coating system, installation of cathodic protection, or any combination thereof, shall be determined based on the characteristics of the specific structure, ensuring that these measures do not adversely affect the existing performance within the environment.

16.9.1.2 Existing Utility Structures

The need for stray current monitoring facilities shall be jointly determined by UTA and the utility operators. If utilities require assistance, the following minimum provisions shall be suggested.

- Test facilities may be installed at select locations for the purpose of evaluating stray earth current effects during start-up and revenue operations. Guidelines for location of test facilities shall be as follows:
    - At all utility crossings with the system (each side of crossing), and on structures located within 300 feet and parallel to the system right-of-way.
    - At locations on specific utility structures that are within 300 feet of the system traction power substations.
    - Natural gas and other pressurized fuel lines with metallic pipelines in proximity to an electrified transit system shall undergo review with UTA and the respective utility owners to identify potential conflicts with stray current. Where feasible, metallic gas lines with the potential to be influenced by stray current from an electrified system shall be considered for relocation and/or replacement with plastic gas lines to eliminate the potential for stray current.

16.9.1.3 Casings

If casings are required, they shall be installed bare unless the owner, engineer, or manufacturer specifies the need for coating and a sacrificial anode system. It's important to note that natural gas and petroleum operators typically avoid using casings due to the risk of corrosion inside the casing on the carrier pipe.

The following requirements apply to casings:

- Dielectric casing insulators shall be installed on the metallic carrier pipe to prevent electrical contact between the casing and the metallic carrier pipe.

- Waterproof end seals shall be used to prevent soil and groundwater infiltration in the annular space between the pipe and casing.
- Corrosion monitoring test leads are mandatory for both the casing and the metallic carrier pipe.

For additional information related to casings, refer to Chapter 6 'Utilities'.

16.9.2 Bridge Structures

The following guidelines outline the fundamental requirements for stray current control on concrete deck girder bridges. The provision of electrical interconnection will mitigate internal stray current corrosion.

16.9.2.1 Deck

For the deck, the following provisions shall be made:

- An insulating coating shall be applied to the top surface of the deck.
- An additional (non-structural) continuous top longitudinal #4 rebar shall be added in the deck slab at each girder and within one foot of the inside face of the ballast walls.
- The aforementioned longitudinal bars shall be welded to a transverse collector bar (#9 rebar) at each bent diaphragm, abutment diaphragm, and abutment backwall.

16.9.2.2 Seat Type Abutments

The following provisions shall be made for seat type abutments:

- Transverse Collector Bar: Provide a transverse collector bar (#9 rebar) at the top of abutment backwalls. All backwall exterior face vertical rebar shall be weld connected to this collector bar.
- Copper Cable: Provide an exothermic weld on a 2/0 AWG copper cable to each collector bar in the backwall and the abutment diaphragm. These cables shall be brought through the abutment backwall (no duct) and directly buried in the ground to a #5 pull box at the end of the wingwall.
- Insulation and Tie Bars: A membrane insulation shall be applied on the end surface of the abutment diaphragm. Epoxy-coated approach slab tie bars shall be used across the full width of the bridge.
- Mortar Blocks: Only high-density mortar blocks shall be permitted.
- Piles: Only precast prestressed concrete piles or cast-in-drilled holes piles shall be permitted.
- Neoprene Sheet Insulation: Provide neoprene sheet insulation between the ground and the bottom of the pile cap.

16.9.2.3 Pier Caps

Elastomeric bearing pads shall be provided. Copper cables shall be exothermically welded to each collector bar in the bent diaphragms. Cables shall be routed through the bent joint to connect the collector bars in the diaphragm.

16.9.2.4 Traction Power

Pole anchorage hardware to be embedded in concrete shall be epoxy-coated. OCS hanger anchorages, where cast into a bridge soffit or other locations, shall also be epoxy-coated.

16.9.2.5 Deck Drains

Drain systems shall be insulated.

16.10 Atmospheric Corrosion Control

Alternating wet and dry weather, along with industrial and chemical pollutants, can contribute to increased corrosion rates of exposed metal structures and hardware. Designs and associated coatings shall be based on the recommendations of reports and preliminary design review. Coatings shall be utilized to significantly decrease the atmospheric corrosion rates of the substrate and to maintain aesthetics.

The purpose of this criteria is to ensure the function, preservation, and appearance of LRT and Streetcar structures exposed to the environment in the most cost-effective manner. The criteria include the following:

- Materials Selection: Acceptable materials shall have proven past performance records for the intended service application.
- Protective Coatings: Barrier or sacrificial coatings shall be applied on steel.
- Design: The design shall avoid recess moisture traps and the use of dissimilar metals.
- Sealants: The accumulation of moisture in crevices shall be prevented through the use of appropriate sealants.

16.10.1 Scope

For structures that may be affected by atmospheric corrosion, a comprehensive identification process shall be conducted. This process shall encompass, but is not limited to, the following elements:

- Exposed metal surfaces on aerial and mainline structures.
- Exposed metal at passenger stations.
- Shop and yard exposed metal surfaces.
- Catenary installations and related metal hardware.
- Right-of-way and enclosure fences.
- Electrical, mechanical, signal, and communication devices and equipment, including traction power substation housings.
- Vehicles.

Regarding coatings, the following criteria shall be met:

- Coatings shall have established performance records for the intended service and be compatible with the base metal to which they are applied.
- Coatings shall demonstrate satisfactory gloss retention, color retention, and resistance to chalking throughout their minimum life expectancies.
- Coatings shall have minimum life expectancies, defined as the duration before major maintenance or reapplication is required, of 15 to 20 years.

16.10.1.1 Metallic-Sacrificial Coatings

For carbon and alloy steels used in tunnels, crawlspaces, vaults, or above grade, the designer shall determine acceptable sacrificial coatings. These may include, but are not limited to, the following options:

- Zinc, either through hot-dip galvanizing with a coating of 2 ounces per square foot or flame spraying.
- Aluminum, available as hot-dip galvanizing with a thickness of 2 mils (thousandths of an inch) or flame spraying.
- Aluminum-zinc alloy coatings.
- Cadmium and electroplated zinc, recommended solely for sheltered areas.
- Inorganic zinc, primarily utilized as a primer.

16.10.1.2 Organic Coatings

Organic coating systems shall consist of a wash primer (for galvanized and aluminum substrates only), a primer, intermediate coat(s), and a finish coat. The designer shall determine acceptable organic coatings, which may include the following:

- Aliphatic polyurethanes.
- Vinyl copolymers.
- Fusion-bonded epoxy polyesters, polyethylenes, and nylons.
- Acrylics, suitable where not exposed to direct sunlight.
- Alkyds, appropriate where not exposed to direct sunlight.
- Epoxy, usable as a primer where exposed to the atmosphere or as the complete system in areas sheltered from sunlight.

16.10.1.3 Conversion Coatings

Conversion coatings, such as phosphate and chromate coatings, shall be used as pretreatments only for further application of organic coatings.

16.10.1.4 Ceramic-Metallic Coatings (Cermets)

Ceramic-metallic coatings, also known as cermets, are acceptable for application on metal panels and fastening hardware.

16.10.1.5 Sealants

All crevices shall be sealed with a polysulfide, polyurethane, or silicone sealant, or with another material deemed acceptable by UTA.

16.10.1.6 Barrier Coating System

Where corrosion protection is required but appearance is not a primary concern, unless otherwise specified by UTA, one of the following barrier coating systems shall be used:

- Near white blast surface according to SSPC-SP 10, followed by a three-coat epoxy system.
- Near white blast surface according to SSPC-SP 10, followed by a two-coat system of inorganic zinc and high build epoxy.
- Near white blast surface according to SSPC-SP 10, followed by a three-coat system comprising epoxy zinc and high build epoxy.
- All coatings shall be applied according to the manufacturer's specifications.

Where both corrosion protection and good appearance are required, unless otherwise specified by UTA, one of the following barrier coating systems shall be utilized:

- Near white blast surface according to SSPC-SP 10, followed by a three-coat system of inorganic zinc, high build epoxy, and polyester urethane.
- Near white blast surface according to SSPC-SP 10, followed by a three-coat vinyl system.
- Near white blast surface according to SSPC-SP 10, followed by a three-coat system of epoxy zinc, high build epoxy, and polyester urethane.
- Near white blast surface according to SSPC-SP 10, followed by a three-coat system of epoxy zinc, high build epoxy, and acrylic urethane.
- All coatings shall be applied in accordance with the manufacturer's specifications.

16.10.1.7 Graffiti-Resistant Coatings

Surfaces accessible to graffiti, including concrete and painted steel surfaces within stations such as walls, columns, and equipment enclosures, shall be protected with a graffiti-resistant coating. This protection shall extend up to a height of 10 feet. The selected coating shall be specifically formulated for graffiti resistance and shall be applied in accordance with the manufacturer's latest published instructions.

16.11 Grounding

16.11.1 Scope

The objective of this section is to guarantee that grounding and corrosion control requirements are harmonized in such a way that neither system becomes ineffective. Achieving complementary systems hinges on the proper location of insulation points and the appropriate implementation of the grounding system. Grounding designs shall undergo review by corrosion control personnel to ensure that the integrity of the systems is maintained while providing a safe and reliable operation. Facilities addressed include the Aerial Structures.

16.11.2 Design and Coordination of Grounding Systems

For the aerial structure, components such as poles, handrails, cable trough components, and other metal components shall be electrically isolated from the top layer of reinforcing steel and the deck. At each end of the structure, insulated cables shall be exothermically welded to the reinforcing steel and terminated in a weatherproof junction box or manhole of appropriate size and convenient location. Support piers and abutments

shall be insulated from the structural deck members. To ensure compatibility between aerial grounding systems and corrosion control systems, the following items shall be carefully coordinated:

- Ground electrode component materials
- Ground electrode location
- Aerial component electrical continuity details
- Pier support/insulation details

END OF CHAPTER 16.

DESIGN CRITERIA MANUAL

/ CHAPTER 17

YARDS AND SHOPS

Table of Contents

CHAPTER 17 YARDS AND SHOPS 1

17.1 INTRODUCTION 1
17.1.1 Standards, Codes, and Guidelines 1
17.2 COMMUTER RAIL YARDS AND SHOPS 2
17.2.1 Operating Requirements 2
17.2.2 Maintenance Shop 5
17.3 LRT YARDS AND SHOPS 7
17.3.1 General Requirements 7
17.3.2 Yard and Shop Facilities 7
17.3.3 LRT Heavy Maintenance Facility and Yard Requirements 8
17.3.4 LRT Light Maintenance Facility and Yard Requirements 10
17.4 BUS MAINTENANCE FACILITIES 11

CHAPTER 17 YARDS AND SHOPS

17.1 Introduction

This section establishes specific guidelines and standards for the design requirements of facilities for the maintenance, repair, and storage of rolling stock including buses, locomotives, light rail, and related equipment for the Utah Transit Authority (UTA). Additional facility functional requirements include equipment storage; areas for maintenance of track, structures, and systems including signals and communications maintenance. The design and construction of all UTA facilities shall be coordinated with UTA to maximize the functionality of the property/space available.

17.1.1 Standards, Codes, and Guidelines

The design for yards, shops, and other buildings shall comply with applicable local, state, and federal laws, regulations, rules, codes, and standards relating to building construction, site design, engineering, and environmental concerns.

Principal applicable codes and standards include the latest revisions of the following:

- International Building Code
- American Railway Engineering and Maintenance-of-Way Association (AREMA)
- BOCA National Mechanical Code
- BOCA National Building Code
- National Electrical Code
- National Fire Protection Association (NFPA Std. 130 et al)
- American Society of Heating, Refrigeration and Air-conditioning Engineers, Inc. (ASHRAE)
- American Conference of Government Industrial Hygienists (ACGIH)
- ANSI Standard A17.1 for Elevators, Dumbwaiters, Escalators, and Moving Walks
- ASCE 7-98 “Minimum Design Loads for Buildings and Other Structures”, American Society of Civil Engineers
- Illuminating Engineering Society of North America
- Underwriters’ Laboratories, Inc.
- Operations and Maintenance Plan
- Bus and Vehicle Fleet Management Plan

- Utah State Building Code
- Applicable State, County and Local building and construction Codes
- Utah Environmental regulations
- County Zoning & Building Regulations
- Where no provisions are made in the codes for features of the design, the best functionality practices shall be followed, with the prior approval of UTA.

17.2 Commuter Rail Yards and Shops

17.2.1 Operating Requirements

The yard and shop design shall align with the maintenance requirements of the commuter rail rolling stock, accommodating the current operations and foreseeable expansions outlined in the UTA Commuter Rail Fleet Plan. The facilities are set to support commuter rail operation hours and allow flexibility in maintenance procedures to adapt to evolving operational requirements.

17.2.1.1 Commuter Rail Heavy Maintenance Facility and Yard Requirements

The facility size is determined through consideration of existing building constraints, real estate availability, and coordination with facility managers and operations. The facility is designed to support normal, preventative, and corrective maintenance, repair, and storage of commuter rail rolling stock. Furthermore, providing adequate space for large parts storage, maintenance of right-of-way storage and activities, as well as provision for rail maintenance work equipment or potential future uses.

Within the facility, the UTA shop supports various essential functions including storage for rolling stock, inspection, service, and maintenance. This includes charging, fueling, daily cleaning, exterior washing, water fill, sewage disposal, and sanding for the efficient operation and maintenance of commuter rail rolling stock.

The shop configuration includes a minimum of one through track for dumping, sanitary wastes, water service, sanding, small repairs, daily inspections, and interior/exterior cleaning. An additional bay accommodates one full train for preventative maintenance and minor repairs, while another bay is designated for repairs of the appropriate number of vehicles. Adequate locations and number of ingress and egress shall be provided to ensure uninterrupted operation.

Layover tracks at the yard accommodate the required number of trains with necessary vehicles and provide facilities for cleaning the interior of vehicles and waste dumping. Track ladders in the maintenance yard allow for

additional outside storage capacity of trains, providing access to the shop tracks from the yard and commuter rail mainline. They also facilitate access to charging, fueling, sanding, and vehicle washing facilities within the service and inspection area of the yard. The yard track layout is designed for trains returning for mid-day servicing or overnight layover, following a prescribed sequence of activities for safe and efficient workflow, including interior cleaning, charging, fueling and sanding, waste removal, and exterior washing.

17.2.1.1.1 Outside Storage Tracks

- Operator access to storage tracks is designed for efficiency, considering inclement weather conditions. Shade or other means of protection shall be provided to maintain safety of operators.
- Wayside power, automatic derails, and adequate lighting and security measures are implemented

17.2.1.1.2 Daily Service Tracks

- The number and length of tracks are determined by facilities managers, operations, and building constraints.
- Minimum requirements include wayside power, fueling, cab cleaning, waste dumping, water, sand, and exhaust capture ducts.
- A train wash bay at the end of each track with undercarriage spray includes environmental mitigation for water collection (e.g., oil-water separators).
- The location of fueling, oil, and other fluid tanks is optimized for efficient operations.

17.2.1.1.3 Inspection and Light Maintenance Tracks

- The number of tracks is determined by facilities managers, operations, and building constraints.
- Raised rail tracks allow effective inspection of trucks, wheels, and brake assemblies.
- A cable system facilitates the movement of cars without the use of a locomotive.
- A mezzanine area parallel with tracks allows roof access to cars and locomotives, considering effective and safe access to the inside of cars and access to the pit below cars.
- A 10-ton crane is installed for roof repairs, and a drop table on at least one track allows for traction motor replacement.

17.2.1.1.4 Long-term Maintenance Tracks (Body Work and Engine Overhaul)

- The number of tracks is determined by facilities managers, operations, and building constraints.
- A cable system allows movement without a locomotive.
- The area around the track provides useful space for multiple functions, including forklift access, work areas, fabrication, parts storage, etc.

- A 35-ton crane with drop cables for cars and locomotives and a 10-ton crane for miscellaneous tasks are installed.

17.2.1.1.5 Paint Booth Track

The track layout is designed for efficient access and minimized maneuvering.

17.2.1.1.6 Other Facility Requirements/Considerations

- The HVAC system effectively mitigates exhaust from locomotives.
- Heating and cooling systems accommodate both winter and summer conditions.
- The facility includes a parts fabrication area, small component overhaul area, traction motor storage and overhaul area adjacent to the drop table.
- Training rooms, locomotive PM area, and a storage area for large parts with easy access are incorporated.
- Adequate office space is designated for management and administrative functions.
- Facility layout is designed for efficient flow (forklift access and movement, parts access, storage, tools, etc.).
- The loading dock location is designed to efficiently accommodate truck movements for delivery.
- Separate access is provided for fuel delivery trucks.
- Delivery and fuel trucks are designed not to impede train operations.

17.2.1.2 Commuter Rail Light Maintenance Facility and Yard Requirements

Light maintenance facilities are located strategically to support the expanded operation of the UTA fleet and minimize travel distance for daily service. The facility size for the light maintenance facility is determined through consideration of existing building constraints, real estate availability, and coordination with facility managers and operations.

17.2.1.2.1 Outside Storage Tracks:

- Operator access to storage tracks is designed to be efficient, considering inclement weather conditions.
- Wayside power is incorporated.
- Automatic derails are installed.
- Adequate lighting and security measures are implemented.

17.2.1.2.2 Daily Service Tracks

- The number of tracks is determined by facilities managers, operations, and building/real estate area constraints.
- Track length is sized to accommodate the length of the train consist.
- Minimum requirements for daily service tracks include wayside power, fueling, cab cleaning, waste dumping, water, sand, and exhaust capture ducts.
- A train wash bay is positioned at the end of each track with undercarriage spray, and an environmental mitigation system for water collection (e.g., oil-water separators) is provided.
- The location of fueling, oil, and other fluid tanks is optimized for efficient operations.

17.2.1.2.3 Other Facility Requirements/Considerations

- An HVAC system effectively mitigates exhaust from locomotives.
- Heating and cooling systems accommodate both winter and summer conditions.
- The storage area is set up for facility functions.
- Adequate office space is designated for management and administrative functions.
- Facility layout is designed to provide an efficient flow for service functions.
- The loading dock location is designed to efficiently accommodate truck movements for delivery.
- Separate access is provided for fuel delivery trucks.
- Delivery and fuel trucks are designed not to impede train operations.
- Maneuvering within the facility to be minimized to maximize operation output.

17.2.1.3 Layover Yards

Layover yards shall have sufficient track space to accommodate current and potential expanded rolling stock. The facility shall have provisions for emergency fueling of locomotives. Minor parts storage to be located at Layover Yards to support unscheduled minor repairs, such as brake shoe replacement and daily inspections and interior cleaning. Provisions for HEP and compressed air will be provided for the maintenance of the layover fleet. All other maintenance and repairs will be performed at the appropriate Yard and Shop facilities.

17.2.2 Maintenance Shop

17.2.2.1 Maintenance Overview and Philosophy

The Maintenance of Equipment (MOE) plan outlines that work is conducted at the maintenance facility, with occasional travel by maintenance personnel on the mainline for unscheduled maintenance. The focus is primarily

on preventative maintenance for rolling stock, involving inspection and repair of components as needed. Malfunctioning components are either repaired in-house or sent to contract personnel for resolution.

The shop layout is designed to segregate work functions, facilitating efficient inspection, servicing, and return of vehicles to revenue operation. Rolling stock inspections occur in specialized bays, each tailored for inspection and minor preventative maintenance (PM) work. Elevated work platforms are required along one track in the locomotive inspection/preventive maintenance bay.

Undercar access is necessary for a minimum of two tracks in the inspection/PM/CM bays. Fixed facilities in the shop optimize forklift access in multiple locations. Additional tasks at the maintenance shop include charging, refueling, cleaning of the interior and exterior, and preparing trains for revenue service. Typically, each locomotive is refueled at the maintenance facility, with emergency refueling available at the end-of-the-line.

17.2.2.2 Workflow Process

The maintenance shop shall have a functional layout that will allow an efficient transfer of parts and materials throughout the facility. Vehicle truck access to the parts cleaning room shall be provided. The ability to load truck assemblies on/off delivery vehicles is required. Highway vehicle access to lube room for delivery of lubricants by either drums or bulk. Minimize maneuvering within the facility for efficient operation and when required, accommodate the physical limitations of the rolling stock.

17.2.2.2.1 Configuration of Floor and Workspace

- Blue flag equipment shall be installed on each track in and out of the repair facility
- Rail mounted on pedestals in pits
- Continuous pits, 3'-5" deep, with utility services listed below
- Ramps and steps from rail level aisles to pit floor
- Portable hoist equipment
- Sufficient clear space beside work positions to bring a small forklift near a raised locomotive and car to remove equipment
- Fixed and Portable scaffolding or mobile platform lift to access roof equipment
- Effluent discharge with oil and grit removal provisions

17.2.2.2.2 Utility Requirements

- Compressed air outlets
- Floor drainage

- Ability to dump car sanitary holding tanks
- Area overhead lighting per industry standard
- Pit and platform lighting
- 120V and 480V receptacles available at all work levels
- Cold water hose bib for shop housekeeping and for filling car tanks
- AC power for auxiliary equipment

17.2.2.2.3 Special Equipment

- Overhead bridge crane
- Truck transfer
- Emergency Eye wash Stations
- Portable step platforms
- Portable acetylene/oxygen cut-off unit
- Portable paint sprayer
- Portable paint spray containment

17.3 LRT Yards and Shops

17.3.1 General Requirements

The yard and shop design shall align with the maintenance requirements of the Light Rail Transit (LRT) rolling stock, accommodating the current operations and foreseeable expansions outlined in the UTA Light Rail Transit Fleet Plan. The facilities are set to support LRT operation hours and allow flexibility in maintenance procedures to adapt to evolving operational requirements.

17.3.2 Yard and Shop Facilities

Yard and shop facilities primarily serve the following functions:

- Storage for revenue vehicles, maintenance equipment and supplies
- Inspection, service, and maintenance of revenue vehicles
- Repair of components removed from revenue vehicles
- Operator reporting and dispatch
- Miscellaneous maintenance and support services

17.3.2.1 Daily Service

Daily service tasks include:

- Visual inspection of the running gear, lights, and car body
- Interior cleaning
- Exterior cleaning

17.3.2.2 Running Repair

Running repair tasks require less than one shift (8 hours) to complete and do not require lifting of heavy components. Running repair may be performed on a two-shift or three-shift schedule. Running repair tasks would include:

- Minor repairs
- Scheduled inspections
- Component change out
- Lubrication
- Testing

17.3.2.3 Heavy Repair

Heavy repair tasks are major repairs and overhauls, scheduled inspections and component change-outs that require more than one shift or require the use of vehicle hoists, cranes, or other special machine tools to complete.

17.3.3 LRT Heavy Maintenance Facility and Yard Requirements

17.3.3.1 Facility Layout

Facility size is determined by existing building constraints, real estate availability, and coordination with facility managers and operations.

Facility Layout shall take consideration of programmed maintenance intervals.

17.3.3.2 Key Track Area Requirements:

- Yard Tracks:

  - Provide at least two points of egress/ingress to the yard.
  - Maximize curve radius for yard tracks.
  - Provide paved areas between yard tracks.
  - Preference for covered/enclosed storage tracks in the yard to mitigate inclement weather – track storage space to be coordinated with operations.
  - Restraining rail on yard tracks.
  - Switches on tangent tracks to be crossovers to allow more flexibility in train movement.
- Daily Inspection Tracks
  - Provide a minimum of three tracks enclosed for the length of the consist.
  - Wayside power.
  - Car wash at the end of each track with a blowdown pit for the full car length – concrete heated outside of wash to prevent ice buildup. Enhanced lighting in the blowdown pit for increased visibility – required environmental mitigation for the water collection system shall be provided (oil water separators, etc.).
  - Sander.
- Inspection and Light Maintenance Tracks:
  - Number of tracks to be determined by facilities manager, operations, and building/real estate area constraints.
  - Tracks shall have pits with suitable depth for efficiently working on cars – considerations for egress/ingress intervals for efficiency (minimum of one access point per car).
  - Pit fall protection.
  - Design shall consider effective and safe access to the inside of cars and access to the pit below cars. Transporting tools and parts from the access platform to inside cars and under cars safely and efficiently is a key design consideration.
  - Mezzanine area parallel with tracks (for the entire length of the pit) to allow for roof access to cars and locomotives – preference for an elevator to allow safe/easy transport of tools and parts.
  - Individual cranes over each track to minimize OCS lockout inefficiencies – prefer I-beam parallel with the track.
  - Three drop tables on at least one inspection and light maintenance track to allow work on all three trucks – truck repair space shall be designed to allow efficient workflow.
  - Truing pit.
- Long-term Maintenance Tracks (Body Work and Engine Overhaul):
  - Number of tracks to be determined by facilities manager, operations, and building/real estate area constraints.

  - Area around the track shall provide useful space for multiple functions, including forklift access, work areas, fabrication, parts storage, etc.
  - Provide a crane over each long-term maintenance track.
  - Design for integration of sustainability processes – vehicle overhauls.
- Paint Booth Track:
  - Track layout shall be designed for efficient access and minimized maneuvering.

17.3.3.3 Other Facility Requirements/Considerations

- Heating and cooling systems need to accommodate both winter and summer conditions effectively.
- Parts fabrication area.
- Small component overhaul area.
- Training rooms.
- In-house rebuild shop shall have efficient access to tracks – crane access considerations.
- Minimize multiple levels to avoid dependency on elevators and cranes.
- Storage area for large parts with easy access.
- Office space for management and administrative functions.
- Management office centrally located to the shop.
- Battery room (fireproof, well-ventilated, spill containment, eye wash).
- Facility layout designed to provide efficient flow for service functions (forklift access and movement, parts access, storage, tools, etc.).
- Loading dock location – design yard to efficiently accommodate truck movements for delivery.
- Delivery should not impede train operations.

17.3.4 LRT Light Maintenance Facility and Yard Requirements

17.3.4.1 Facility Size Determination

Determined by existing building constraints, real estate availability, and coordination with facility managers and operations.

17.3.4.2 Facility Layout:

Consideration of programmed maintenance intervals in the facility layout.

17.3.4.3 Key Track Area Requirements:

- Yard Tracks:
  - Provide at least two points of egress/ingress to the yard.
  - Maximize curve radius for yard tracks.
  - Paved areas between yard tracks.
  - Preference for covered/enclosed storage tracks in the yard to mitigate inclement weather – track storage space to be coordinated with operations.
  - Restraining rail on yard tracks.
  - Switches on tangent track to be crossovers to allow more flexibility in train movement.
- Daily Inspection Tracks:
  - Provide a minimum of three tracks enclosed for the length of the consist.
  - Wayside power.
  - Car wash at the end of each track with a blowdown pit for the full car length – concrete heated outside of wash to prevent ice buildup. Enhanced lighting in the blowdown pit for increased visibility – required environmental mitigation for the water collection system shall be provided (oil water separators, etc.).
  - Sander.

17.3.4.4 Other Facility Requirements/Considerations:

- Heating and cooling systems designed to effectively accommodate both winter and summer conditions.
- Office space for management and administrative functions.
- Facility layout designed to provide efficient flow for service functions (forklift access and movement, parts access, storage, tools, etc.).
- Loading dock location – design yard to efficiently accommodate truck movements for delivery.
- Delivery should not impede train operations.

17.3.4.5 Vehicle Criteria

The light rail vehicles (LRVs) shall have characteristics as specified in Chapter 11.

17.4 Bus Maintenance Facilities

[TO BE ADDED IN LATER REVISIONS]

END OF CHAPTER 17.

DESIGN CRITERIA MANUAL

/ CHAPTER 18

RAIL TRAILS

Table of Contents

CHAPTER 18 RAIL TRAILS **1**

18.1 GENERAL 1
18.2 PROJECT IMPLEMENTATION 4
18.3 SITE WORK 4
18.3.1 Setback *5*
18.3.2 Fencing *5*
18.3.3 Trail Surface *6*
18.3.4 Drainage *6*
18.3.5 Landscaping *7*
18.3.6 Lighting *8*
18.3.7 Signs *8*
18.3.8 Striping *9*
18.3.9 Roadway Interface Features *9*
18.3.10 Restroom Facilities *9*
18.4 CROSSINGS 9

CHAPTER 18 RAIL TRAILS

18.1 General

This chapter describes the functional design requirements and interface criteria for trails proposed adjacent to solely UTA-owned railroad track property. These guidelines apply to multi-use trails, including pedestrian and bicycle trails. Note: All motorized vehicles, including motorized bicycles ("mopeds"), and horses are prohibited in active railroad track corridors.

The criteria apply to all railroad property owned by UTA. Trails are not permitted in the commuter rail corridor, as it is adjacent to active freight rail under jurisdiction by other railroads. However, trails may be allowed within UTA-owned streetcar rail corridors, subject to an agreement between UTA and the local jurisdiction. Trails along BRT exclusive guideways owned by UTA will follow similar requirements as for light rail. Trail planning in UTA rail corridors not yet fully developed or fully engineered for transit, shall be master planned to not restrict station location (refer to Figure 18-1).

Potential Rail Trails applicants shall be prepared to accommodate a demanding design development process. Given the variety of issues that require coordination, the iterative nature of idea development, and the potential complex interrelation of proposed design elements with future transit use, UTA may deny a previously acceptable design concept at any time. In such instances, designers may need to explore alternate concepts, or the property may be deemed unsuitable for the purpose under investigation. The trail development proposal shall be submitted to the UTA Real Estate Department. All communications shall be submitted in writing. All proposals are subject to preliminary review by the UTA Development Review Committee (DRC), comprising key UTA staff responsible for the development, operation, maintenance, and preservation of UTA property assets. The DRC may make recommendations to UTA's Chief of Service Development or their authorized agent, who is UTA's authorized agent for final approval or disapproval.

Each application shall include the following items, and shall provide approval documentation from an authorized UDOT agent (if applicable), and an authorized representative from the Engineering Department of the appropriate local jurisdiction prior to submittal for review by UTA:

- Project description
- Area Map
- Site plans and plan/profile drawings
- Sections

- Other drawings as may be required for adequate review
- Drainage design report
- Storm Water Pollution Prevention Plan
- Grade crossing safety report (if applicable)
- Trail maintenance plan
- Construction management plan

Typical drawings shall be at an appropriate and legible engineering scale with English units on 11x17 media. All final plans and reports for the trail design shall be seal by an engineer registered in the State of Utah.

Project Descriptions shall include the proposed functional use of the trail, all proposed modal uses (such as bicycle, pedestrian, etc.), relevant restrictions, and any additional explanations pertinent to the trail proposal.

Area Maps shall be included in the engineering drawings at an appropriate scale to accurately delineate the entire area of UTA property to be affected.

Site plans for trail development shall include all intended uses and incorporate existing details of the rail corridor, including:

- Property boundaries (demonstrating the entire width of the railroad rights-of-way)
- Existing fencing
- Roadway limits at all crossings or frontages
- Existing topography (represented in 2-foot contours)
- All existing drainage facilities
- Existing track work
- Existing signals
- Existing catenary equipment
- Existing bridges
- Existing public utilities
- Building footprints within a 10-foot radius
- Other details as required to fully integrate the trail plan with the overall railroad corridor function

Sections shall include typical sections as well as other cross-sections as may be required for adequate review. Additional sections will be required to illustrate situations such as: railroad cuts or steep grades, severe terrain, existing or proposed separation grade crossings, narrow corridor widths, etc.

Other drawings may be required for adequate review, such as grading and drainage plans, signage plans, lighting plans, striping plans, etc.

The Drainage Design Report shall include a detailed statement summarizing all material impacts of the proposed trail to the storm water runoff within the right of way. The summary should identify how surface water management, including cross flow, is planned and how the tracks within the right of way will be protected (UTA may provide to the extent possible any as-built drawings or similar material showing the existing storm water runoff system). A particular objective of surface water management is to protect ballast from being fouled (i.e., silt carried by runoff).

A Storm Water Pollution Prevention Plan shall be developed in accordance with the provisions of the Memorandum of Understanding (MOU) between UDOT and the Utah Department of Environmental Quality, including the Best Management Practices (BMP) plans. Approval from the Utah Division of Water Quality is required.

If applicable, a Grade Crossing Safety Report shall be completed. This includes a hazard/risk analysis prepared and signed by a professionally-certified safety engineer, or another risk management or safety professional acceptable to UTA. The completed report shall be provided to UTA. It shall address all aspects of safety issues and, if applicable, potential vulnerabilities of a trail proposal. The report shall include, but not be limited to, an analysis of pedestrian protection design at roadway crossings, with particular attention paid to mid-block roadway crossing conditions and trail user behaviors.

The Trail Maintenance Plan shall describe the applicant's maintenance strategy for the affected corridor in the case the encroachment is approved. The plan shall include, but not be limited to, how roadway barriers at crossings may be cleared and reinstalled during emergency situations, major trail repair, or railroad maintenance access. The maintenance intent of the trail owner shall be clear, demonstrating comprehensive responsibility for the development within the UTA railroad corridor.

The Construction Management Plan shall include construction safety plans for work performed in the right of way, as outlined as part of the Roadway Worker Protection Safety Program Manual. The plan shall delineate how the contractor and its subcontractors plan to protect the rail bed from water cross flow and potential sediment contamination of rail beds. The plan shall specify the organizational structure for consistent day-to-day work management throughout the project. It is crucial to maintain a stable team of key personnel involved in onsite management of the day-to-day work for the project's success.

The Construction Management Plan shall address such items as:

- Job Layout
- Personnel and Subcontractor Personnel Information
- Accident Prevention Responsibility
- Job Site Safety and Sanitation
- Traffic Control
- Public Protection
- Site Cleanup
- Construction Equipment and Material Storage
- Fire Protection
- Gasoline and Fuel Oil Management
- Employee parking

18.2 Project Implementation

A General License Agreement between UTA and the applicant or sponsor, demonstrating financial responsibility for the trail, shall be finalized prior to the construction of an approved trail project. The licensee and its contractors shall enter into Right of Entry agreements prior to any entrance onto UTA property for any reason.

The Contractor Right of Entry Agreement for project construction cannot be finalized until the General License Agreement is completed, and full design approval has been granted. All construction workers shall receive Railroad Roadway Worker Protection Training from UTA and subsequently comply with all applicable regulations. The contractor will be required to demonstrate adequate insurance protection. Insurance exclusion for railroads and explosion, collapse and underground hazard shall be removed from the required policy prior to acceptance by UTA.

18.3 Site Work

This section provides minimum design criteria for trail development within UTA railroad corridors. Each trail plan will be reviewed for its site-specific conditions and may warrant more conservative design requirements.

18.3.1 Setback

The technical factors affecting setback include the type, speed, and frequency of current or master-planned trains in the corridor, separation technique, topography, sight distance, maintenance requirements, etc. UTA's standard for trail setback in light rail corridors is 25 feet from the centerline of the nearest existing and/or planned track (refer to Figure 18-1). Exceptions may exist in constrained light rail corridor areas to allow for 15 to 25 feet of setback where additional separation measures can be implemented, such as existing and/or planned slower and reduced frequency train operation, solid barriers, vertical separation, and other added safety measures. Such variances will be reviewed on a case-by-case basis and will require a design exception. Additional setback may be required where railroad cut, or high-grade conditions exist and/or are planned.

In streetcar rail corridors where train speeds are generally lower than light rail, coordination with UTA on setback will be established by agreement with UTA and the local jurisdiction. Setback will still depend on the same technical factors as above. Refer to the separation and setback on the S-Line shown in Figure 18-3 as an example.

18.3.2 Fencing

Where the trail is separated from the light rail track by 25 feet or more, the trail shall be separated from the track with a minimum fence height of 42 inches or as required by applicable state and federal regulations, whatever is more stringent, except in approved locations where the trail is directly adjacent to the station platform. If the trail is less than 25 feet from the light rail track, the fence height shall be a minimum of 48 inches (a taller fence may be required depending on conditions). Trails serving as bike paths shall be designed in accordance with the current AASHTO Guide for the Development of Bicycle Facilities regarding fencing and guardrails.

In streetcar rail corridors, the requirement for fencing will be established based on an agreement between UTA and the local jurisdiction.

Fencing materials may be required to match fencing specifications found elsewhere within the UTA light rail corridor. Fencing specifications shall comply with local code and zoning regulations. All fencing shall allow for through visibility and line-of-sight safety.

The separation fence shall be placed away from the edge of the trail in compliance with AASHTO regulations. However, separation fencing shall be placed as close to the trail as allowed by applicable regulations to maximize the setback of the fence from the centerline of the nearest railroad track work (refer to Figure 18-1).

Where fencing is to be placed adjacent to signal cabinets, a minimum 4-foot clearance is required around the cabinet to allow signal maintenance personnel clear access to this equipment.

18.3.3 Trail Surface

The trail surface shall be a minimum of 10 feet wide. The trail surface shall include a sub-grade consisting of 6 inches of untreated road base compacted to 96% density, and 3 inches of compacted asphalt with a maximum aggregate size of ½-inch. Soil sterilant shall be applied on top of the road base. A trail surface composed of 4 inches of concrete may be substituted for the asphalt.

The longitudinal grade of the trail shall be a maximum of 5%. The preferred maximum cross slope is 2% and shall slope in one direction, crowning is not acceptable. See Section 18.3.4, 'Drainage,' for additional slope requirements.

The profile of the path shall generally follow the existing ground surface and the track profile to avoid large cross-grade differentials. The surface shall be smooth and free of potholes, and uniform along the pavement edge.

Where conditions require construction of retaining walls to retain slopes, the walls shall be constructed on the trail side of the separation fence.

The trail surface shall meet the current applicable requirements of the ADA.

Trails serving as bike paths shall be designed in accordance with the current AASHTO Guide for the Development of Bicycle Facilities regarding design speed, horizontal and vertical alignment, grades, and stopping sight distances.

18.3.4 Drainage

Maintaining the integrity of the railroad drainage system is of paramount importance. Therefore, trail drainage shall be designed to prevent any impact to the railroad track or overloading of the track area drainage system or other systems within the corridor.

Wherever feasible, the trail shall be designed to drain away from the track. A 2% cross slope is required on all trail surfaces. The trail shall slope in one direction; crowning is not acceptable.

Drainage shall be by gravity flow.

Discharge from any sanitary sewer shall not be permitted to enter any drainage system.

18.3.4.1 Design Method

Refer to Section 5.9.4 'Hydrology and Hydraulics', for guidance on design method. Refer to Section 5.9.5 'Selection of Drainage Structures', for guidance on drainage structures. Refer to Section 5.9.10 'Detention Requirements', for guidance on possible detention systems.

18.3.4.2 Storm Frequency

Refer to Section 5.9.4.2 'Storm Frequency', for guidance.

18.3.4.3 Storm Water Management and Sediment Control

Refer to Section 5.9.9 'Storm Water Management and Sediment Control', for guidance.

18.3.4.4 Drainage Grates and Manhole Covers

Drainage inlet grates, manhole covers, etc., on bikeways should be designed and installed in a manner that provides an adequate surface for bicyclists. They shall be maintained flush with the surface where resurfacing.

Drainage inlet grates on bikeways shall have openings narrow and short enough to assure bicycle tires will not drop into the grates, regardless of the direction of bicycle travel.

Curb and gutter construction should avoid the creation of a vertical lip from the curb to the gutter, as the lip may pose problems for bicyclists where entering from the edge of the roadway at a flat angle. Where a lip is deemed necessary, the height shall be limited to ⅝ of an inch.

18.3.5 Landscaping

Landscaping for the trail shall be designed in accordance with crime prevention through environmental design (CPTED), property protection, and aesthetic objectives.

- Do not create hiding places by use of high and/or thick vegetation.
- Do not introduce invasive species into the railroad corridor, which have the potential of obstructing the maintenance or drainage of the track structure, or cause damage to the trail surface.
- Do not introduce trees adjacent to the railroad corridor, which have the potential of encroaching on the track and catenary envelope.
- Use low maintenance drought tolerant landscaping. Do not use irrigation systems.

- The landscape design should be compatible with the local and regional aesthetic character adjacent to the trail.
- The landscape design should establish visual identity through consistent use of a few basic construction elements and plant materials, where required, while maintaining interest and compatibility with adjacent areas using other materials that vary from site to site.
- Protect existing views and vistas.
- Protect existing plant materials as appropriate, particularly mature trees, and replace such material, which shall be removed during construction.
- Coordinate grading required for landscape design with overall site grading requirements.

Recommended lists of low-water-use plants are available in the Chapter 9 'Landscaping.'

The design plans shall include a landscaping plan detailing the planting locations and ultimate size of the plants to demonstrate their relationship to the trail and the track.

18.3.6 Lighting

Lighting is not a standard requirement for trails along UTA corridors. Lighting requirements will be considered on a case-by-case basis. Any sections of the trail historically prone to vandalism, areas with inhibited visibility such as under bridges or in tunnels, or where heavy night use is expected require lighting considerations. AASHTO light level recommendations shall be considered for minimums.

18.3.7 Signs

Standard UTA "No Trespassing" signs shall be installed at the separation fence within 50 feet of each light rail track grade crossing and at a maximum spacing of 500 feet along the separation fence (refer to Figure 18-2).

Other signs required for control of trail traffic, track grade crossing control, or highway grade crossing control shall be designed in conformance with the Manual of Uniform Traffic Control Devices (MUTCD).

Sign description and locations shall be included on the design plans. Other wayfinding signage may be required by UTA.

18.3.8 Striping

A yellow centerline stripe may be used to separate opposing directions of travel. A centerline stripe will be used in the following circumstances:

1. Where there is heavy use;
2. On curves with restricted sight distance; and
3. Where the path is unlighted and nighttime use is expected.

18.3.9 Roadway Interface Features

A physical feature shall be included at each roadway approach that requires a bicyclist or equestrian to dismount before proceeding into the public right of way. Non-compatible modes of transportation shall have separate entrance/exit devices and shall be placed in advance of reaching common areas. Each device utilized shall restrict motorized vehicle access but allow emergency and maintenance vehicle access. Devices shall be easily restored to restrict motorized vehicle access upon termination of emergency or maintenance vehicle access. When locating such installations, care should be taken to ensure that each device is well-marked and visible, day or night (i.e., install reflectors or reflectorized tape).

Striping near each entrance/exit device is recommended. If sight distance is limited, special advance warning signs or painted pavement warnings should be provided. Barriers should permit passage of bicycle-towed trailers, adult tricycles, and assure adequate room for safe accessible passage.

18.3.10 Restroom Facilities

Trail design plans shall indicate locations of any public restrooms existing in the area or proposed for construction as part of the project, which will be available to trail users. UTA will not maintain the restroom facility, and the application shall include a maintenance plan for the restroom.

18.4 Crossings

Trail crossings shall be limited. Where it's necessary for the trail to cross the track, existing crossings or grade separation structures shall be utilized. The risk is at its lowest where the trail intersects the track(s) at a 90-degree angle. Trail users may use existing sidewalks that intersect within public ways, given the appropriate warning devices and approach angles are already established. If new at-grade crossings of the track are proposed,

approval shall be secured from all affected governing agencies, including UTA and UDOT. See Chapter 19 for guidance on pedestrian crossings.

Crossings of streets and highways by trail require the approval of the governing agencies having jurisdiction over the roadway's development. Wherever feasible, the trail should utilize existing signalized pedestrian crossings. New trail/roadway crossings require signing, stripping, and signalization that are compliant with AASHTO and MUTCD standards. Trail intersections and approaches should be positioned on relatively flat grades. Stopping sight distances at intersections should be verified, and adequate warning should be given to enable bicyclists to stop before reaching the intersection, especially on downgrades.

If a trail crossing of a roadway is proposed adjacent to an existing roadway/rail grade crossing, the design plans shall address any modifications that will be required to the existing grade crossing warning devices, stop bars, signal, curbs, and traffic islands to effectively warn trail users. The signal plans for the crossings shall identify interlocking requirements between the pedestrian crossing signals and the railroad signal system to prevent cars from queuing on the tracks during pedestrian crossing of the roadway. Any additions or changes to the railroad's signal or active crossing warning system shall be designed and installed by the entity having jurisdiction, at the project's expense.

Figure 18-1: Rail Corridor Typical Section for Light Rail Trail Planning

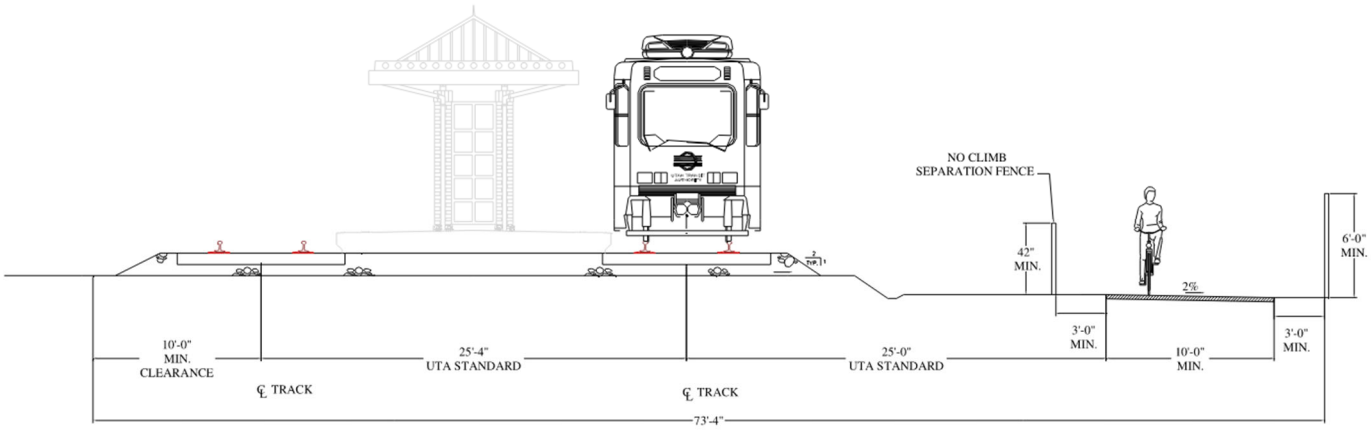

Figure 18-2: No Trespassing Signs

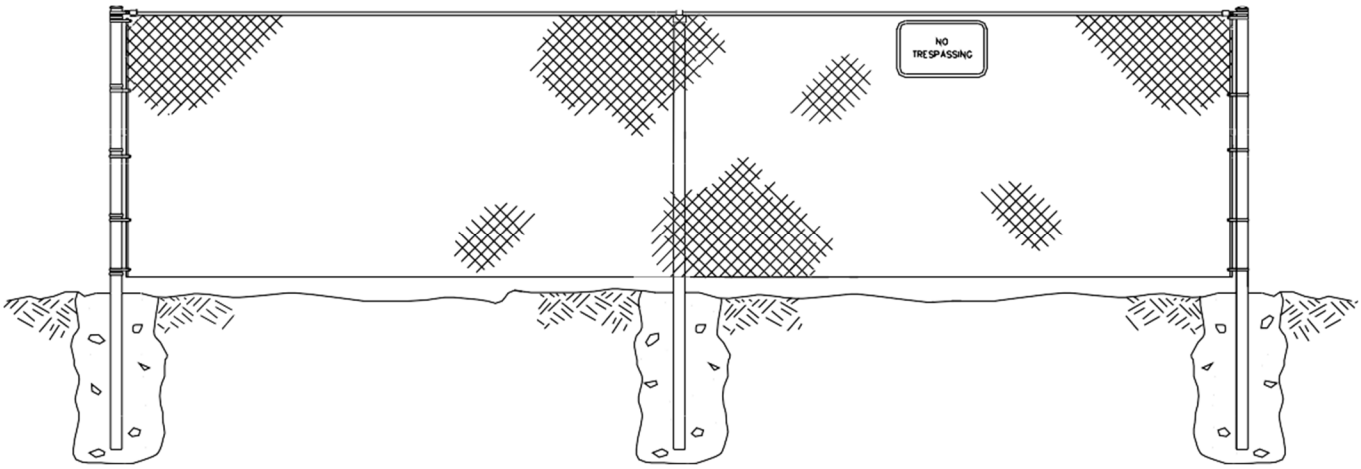

Figure 18-3 Example of a Streetcar trail section from the S-Line

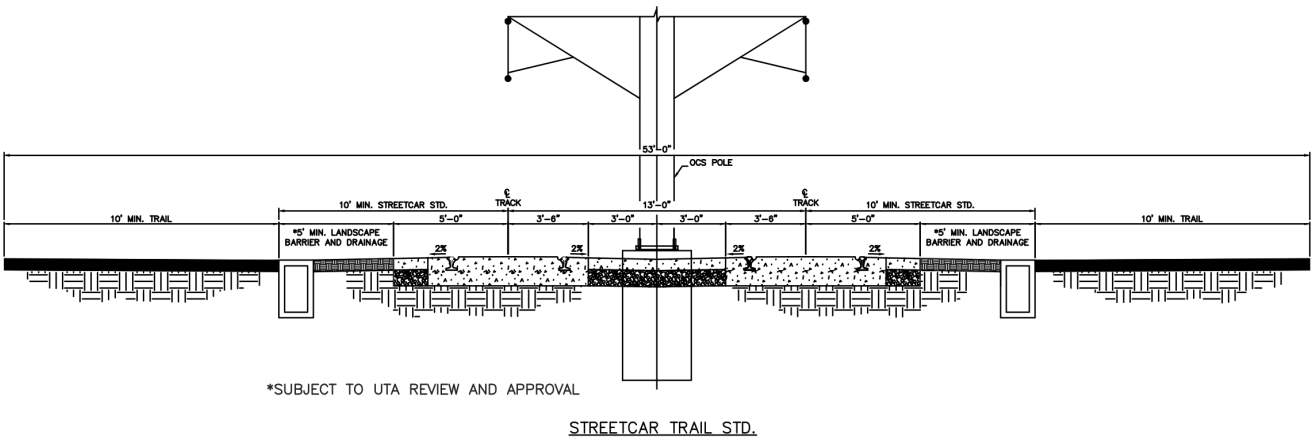

END OF CHAPTER 18.

DESIGN CRITERIA MANUAL

/ CHAPTER 19

PEDESTRIAN CROSSINGS

Table of Contents

CHAPTER 19 PEDESTRIAN CROSSINGS 1

19.1 General 1
19.2 Standards 1
19.3 Design Intentions 1
19.4 Implementation 1
19.5 Definitions 2
19.6 Pedestrian Grade Crossing Design 2
19.6.1 Grade Crossing Diagnostic Review 2
19.6.2 Diagnostic Team 2
19.6.3 Existing Conditions and Hazard Assessment 3
19.6.4 Pedestrian Hazard Evaluation and Mitigation 6

CHAPTER 19 PEDESTRIAN CROSSINGS

19.1 General

This chapter on pedestrian grade crossings, in conjunction with the latest edition of the UDOT Pedestrian Grade Crossing Manual and the RR series of the latest version of the UDOT Standard Drawing Book, provides guidelines and drawing details for light rail, streetcar, and commuter rail pedestrian crossings. These are directed towards planners, designers, and managers. The Utah Department of Transportation, in accordance with Utah State Code and Administrative Rule R930-5, governs all public grade crossings in Utah. As stated in the UDOT Pedestrian Grade Crossing Manual, UDOT's objectives relating to grade crossings are to improve safety at crossings, enable efficient operations at crossings, and provide non-motorized access through grade crossings.

Non-exclusive rail alignments and BRT pedestrian grade crossings are subject to the latest Utah MUTCD and applicable UDOT standard roadway crossings. Street-running alignments are typically controlled by traffic signals and generally require minimal additional safety treatments per the UDOT pedestrian grade manual.

19.2 Standards

Pedestrian crossings designs shall align with this design criteria manual, the latest edition of the UDOT Pedestrian Grade Crossing Manual, and the latest versions of the RR series of the UDOT Standard Drawing Book.

19.3 Design Intentions

The general approach to designing pedestrian grade crossings is as follows:

- Conduct grade crossing engineering study and grade crossing evaluation (diagnostic team) to complete:
    - A safety analysis of grade crossings to identify potential hazards and sight distance restrictions.
    - Propose design treatments to eliminate/mitigate hazards and improve sight distance.
    - Document and obtain consensus with diagnostic team on proposed pedestrian safety treatments.
    - Design grade crossing pedestrian safety treatments following the standards per Section 19.2.

19.4 Implementation

The design guidelines for pedestrian crossings apply to:

- New projects
- Upgrades to existing grade crossings

Note: These guidelines do not require retroactive application. The existing system shall be brought into compliance as future improvement projects are implemented that upgrade the existing crossings.

19.5 Definitions

The following alignment definitions are from the UDOT Pedestrian Grade Crossing Manual:

- Exclusive alignment: a railroad alignment that is either fully grade-separated or at-grade without crossings.
- Semi-exclusive alignment: a railroad alignment where trains operate at-grade with fences and/or barriers between crossings.
- Non-exclusive alignment: an alignment, typically used by LRT, BRT, and trolleys, where trains operate in mixed flow separated from traffic by curbs or striping.

UTA's existing light rail, streetcar, commuter rail, and BRT system operates in both semi-exclusive and non-exclusive alignments. The existing system has grade-separated crossings as well as crossings where motorists, pedestrians, and bicycles cross the tracks/alignment at-grade.

19.6 Pedestrian Grade Crossing Design

19.6.1 Grade Crossing Diagnostic Review

UDOT has jurisdiction over all railroad grade crossings in the state of Utah that are used by the public (Utah State Code Title 54-4-14 and Administrative Rule R930-5). UDOT has authority to evaluate and approve the type of improvements, safety treatments, and mitigation measures at all public railroad grade crossings. Detailed information regarding procedures, roles, and responsibilities with respect to this can be found in UDOT's Railroad Coordination Manual of Instruction and Administrative Rule R930-5. General guidelines are provided below.

19.6.2 Diagnostic Team

The inclusion of the diagnostic team is required throughout the grade crossing design process. This team is comprised of the UDOT Chief Railroad Engineer, representatives from UTA, including the project manager, and a representative from the local highway authority that has jurisdiction over the roadway. Other representatives that have interest in the grade crossing may also be included (e.g., school district, fire department). The diagnostic team

shall meet a minimum of two times (initial review at preliminary design and subsequent review at plan production) onsite at the grade crossing to evaluate existing conditions, hazards, treatments, etc. Refer to *the UDOT Pedestrian Grade Crossing Manual and the Railroad Coordination Manual of Instruction* for additional details on grade crossing diagnostic review requirements.

19.6.3 Existing Conditions and Hazard Assessment

The initial onsite meeting at the grade crossing, conducted by the diagnostic team, shall complete the Diagnostic Team Checklist Pedestrian Grade Crossing Hazard Analysis form (refer to Figure 19-1). This process documents existing details associated with the grade crossing and potential hazards, including:

- General crossing information–train type, speed, crossing width, frequency, number of tracks, alignment type, gate timing, etc.
- Identification of potential hazards–skewed crossing, sight distance, school route, pedestrian surges, multiple tracks (wide crossing), etc.

Figure 19-1: Diagnostic Team Checklist Pedestrian Grade Crossing Hazard Analysis form

DIAGNOSTIC TEAM CHECK LIST PEDESTRIAN GRADE CROSSING HAZARD ANALYSIS	Diagnostic Team Member:_____ Date:_____
Grade Crossing Location (City/County): Street Name: Crossing No.	Diagnostic Team: Initial Review Date Final Review Date

General Information:	**Train Speed:** _____mph **Max. Frequency of Trains:**_____/_____ (trains per unit time)		**Crossing Width:** _____ft (stop bar to 6' past far rail) **Number of Tracks** _____	
Type of Alignment:	**Semi-exclusive** ☐Yes ☐No A railroad alignment that is in a separate right-of-way or along a roadway where motor vehicles, pedestrians, and bicycles have limited access and cross at designated locations only. The alignment is typically separated by fencing or barriers between crossings. **Street Running** ☐ Yes ☐ No A railroad alignment in which trains operate in mixed traffic with all types of road users. The alignment is typically separated from traffic by a curb or striping.			
Type of Train Operation: (check all that apply)	**Passenger**	☐ Yes ☐ No	**Light Rail**	☐ Yes ☐ No
	Freight	☐ Yes ☐ No	**Trolley**	☐ Yes ☐ No
	Commuter Rail	☐ Yes ☐ No	**Other** _____	☐ Yes ☐ No
Crossing Gate Timing:	**Warning Time**	_____sec	**Preemption Time**	_____sec
	Clearance Time	_____sec	**Total Time**	_____sec
Area Information:	**Area Type:**	☐ Rural ☐ Urban		
	Population within 1 sq. mi.:	☐ ≤1000 ☐ >1000		
Proximity of Sidewalk to Highway-Rail Grade Crossing:	☐ Sidewalk ≤25 feet from Edge of Traveled Way (sidewalk may be treated as part of the grade crossing) ☐ Sidewalk >25 feet from Edge of Traveled Way (sidewalk must be treated separately)			

Comments/Field Observations:

DIAGNOSTIC TEAM CHECK LIST PEDESTRIAN GRADE CROSSING HAZARD ANALYSIS		Diagnostic Team Member:_____ Date:_____
Grade Crossing Location (City/County): Street Name: Crossing No.		Diagnostic Team: Initial Review Date Final Review Date
POTENTIAL HAZARD	**HAZARD IDENTIFIER**	**COMMENTS/FIELD OBSERVATIONS**
Skewed crossing	☐ ≤30° from perpendicular ☐ >30° from perpendicular	
Does Crossing have a Yard track	☐ Yes Frequency of use _____/_____ ☐ No	
Does the Crossing have a Side track	☐ Yes Frequency of use _____/_____ ☐ No	
At-Grade Crossing	☐ Active Control ☐ Passive Control ☐ N/A	
Street Running: Mid-Block Crossing	☐ Traffic Signal ☐ Unsignalized ☐ N/A	
Street Running: Intersection Crossing	☐ Traffic Signal ☐ Unsignalized ☐ N/A	
Multi-Use Path Crossing (pedestrians and/or bicycles)	☐ Traffic Signal/Active Control ☐ Unsignalized/Passive Control ☐ Within 25' of Highway-Rail Grade Crossing ☐ N/A	
Intersection within 200 feet (Intersections within 200 feet should have preemption)	☐ Traffic Signal ☐ Unsignalized ☐ N/A	
Adequate Approach Landing for Pedestrian / Bicycles (4' X 4' or more)	☐ Yes ☐ No	
Restricted Bicycle Sight Distance (for pathway crossings only)	☐ Yes ☐ No	
Restricted Pedestrian Sight Distance	☐ Yes ☐ No	

DIAGNOSTIC TEAM CHECK LIST PEDESTRIAN GRADE CROSSING HAZARD ANALYSIS		Diagnostic Team Member:_____ Date:_____
Grade Crossing Location (City/County): Street Name: Crossing No.		Diagnostic Team: Initial Review Date Final Review Date
POTENTIAL HAZARD	**HAZARD IDENTIFIER**	**COMMENTS/FIELD OBSERVATIONS**
Pedestrian Crosses Tracks with Train(s) Approaching – Safe Route to School	☐ Yes ☐ No If Yes, school district:_____	
Pedestrian Crosses Tracks with Train (s) Approaching – Special Needs Groups	☐ Yes ☐ No If Yes, potential groups:_____	
Potential pedestrian surges (Near event center, station, etc.)	☐Yes ☐ No	
At 4 fps, does the Crossing width exceed the minimal 20-second warning time?	☐ Yes ☐ No	

19.6.4 Pedestrian Hazard Evaluation and Mitigation

The completion of the diagnostic checklist provides a basis for further hazard evaluation and potential mitigation strategies/safety treatments. The UDOT Pedestrian Grade Crossing Manual offers guidance for mitigation strategies and safety treatments for common hazards, including:

- Sight distance restrictions for pedestrians and bicyclists–determined by engineering study.
- High pedestrian volumes and potential pedestrian surges.
- School zones.
- Multiple tracks.
- Crossing width.
- Unsignalized intersections.
- Skewed crossing.
- Stations near grade crossings.

Mitigation strategies and safety treatments are determined by utilizing the Safety Treatment Flow Charts referenced in the UDOT Pedestrian Grade Crossing Manual (refer to Figures 19-2 and 19-3). The flowcharts present warrants that shall be addressed during the design process. These charts help determine the required, recommended, and suggested pedestrian safety treatments depending on the hazard warrant. The decision to incorporate the safety treatments should be based on site conditions and appropriate engineering judgement.

Figure 19-2: Urban Pedestrian Grade Crossing Flow Chart

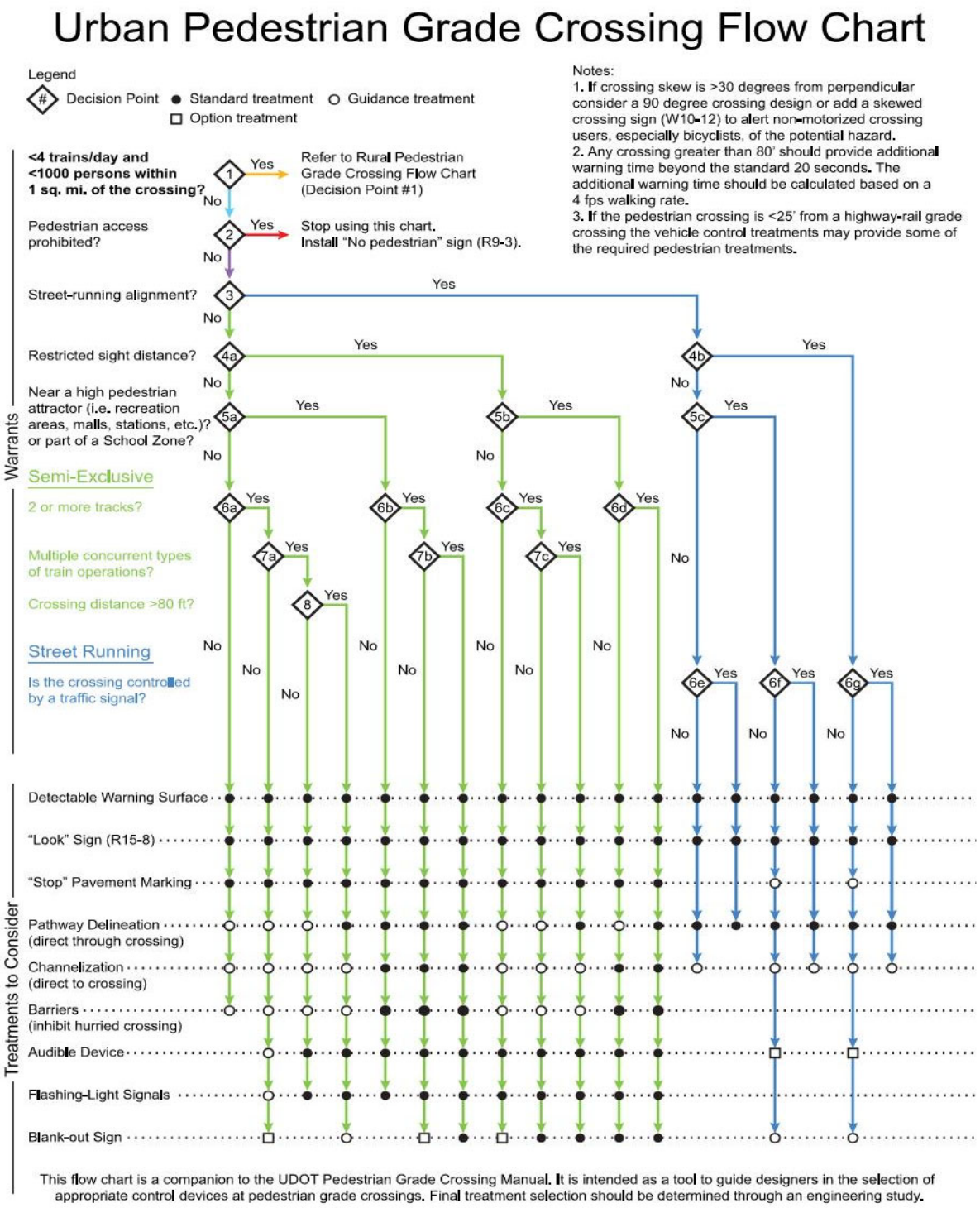

Figure 19-3: Rural Pedestrian Grade Crossing Flow Chart

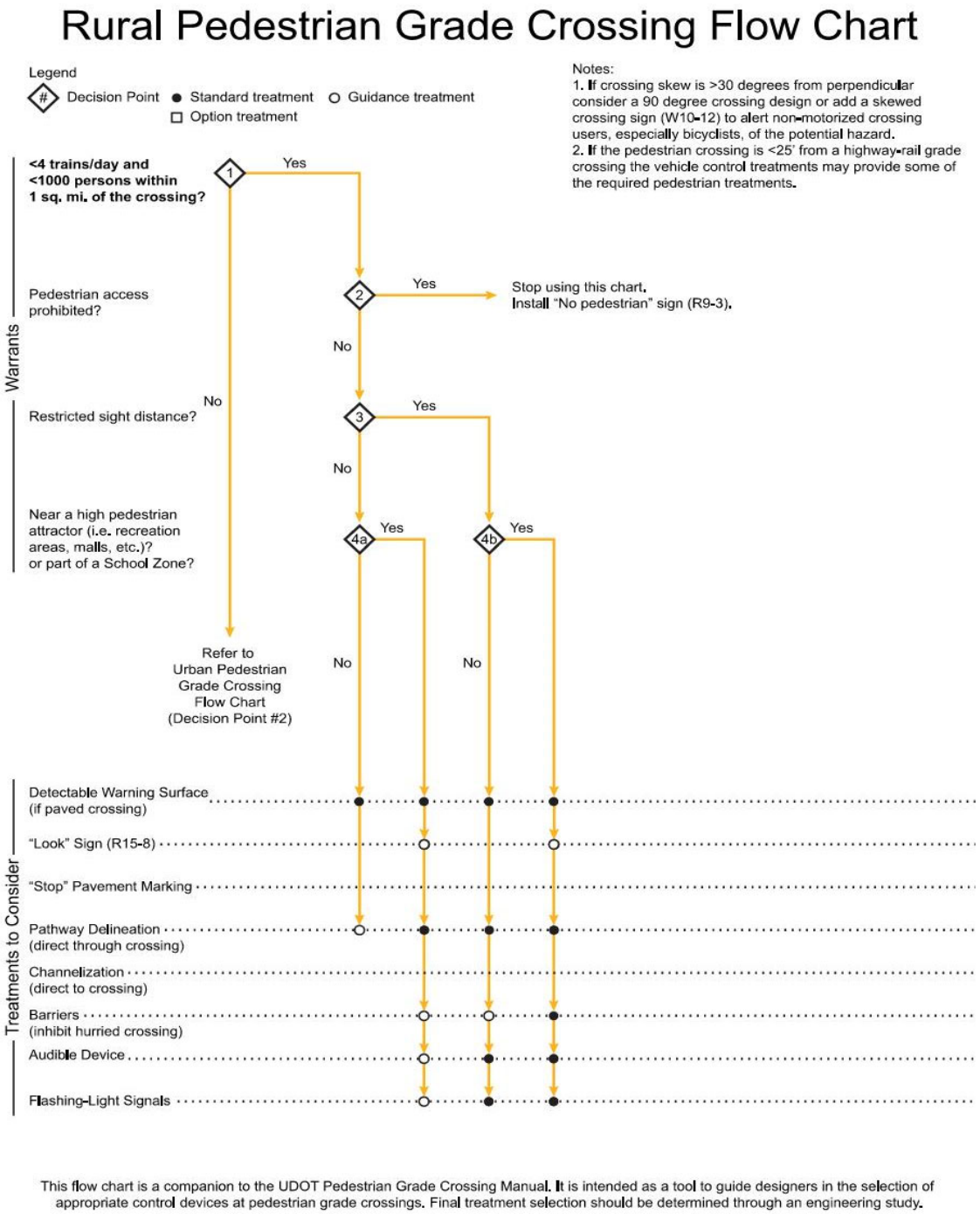

END OF CHAPTER 19.

DESIGN CRITERIA MANUAL

/ CHAPTER 20

PARK AND RIDE LOTS

Table of Contents

CHAPTER 20 PARK AND RIDE LOTS 1

20.1 GENERAL 1
20.2 SCOPE 1
20.3 CODES AND STANDARDS 1
20.4 LIGHTING 2
20.5 GENERAL PARK AND RIDE SITE DESIGN GUIDELINES 2
20.5.1 Vehicular Entrances and Exits to Station Site Facilities 2
20.5.2 Kiss-and-Ride Facilities 3
20.5.3 Automobile Parking Facilities 7
20.5.4 Motorcycle Parking 7
20.5.5 Bicycle Storage 7
20.5.6 Borders of Parking Areas 8
20.5.7 Pedestrian Access 8
20.5.8 ADA 8
20.5.9 Park-and-Ride Entrance Signs 9
20.5.10 Snow Removal 9
20.6 CRIME PREVENTION AND VANDAL RESISTANCE 9
20.6.1 System Safety and Security 10
20.6.2 EV Charging 10

CHAPTER 20 PARK AND RIDE LOTS

20.1 General

Park and ride facilities shall efficiently, economically, safely, conveniently, and comfortably serve the needs of patrons. When designing these facilities, it is crucial to consider anticipated growth and the long-term viability of the system. Equal importance shall be given to functionality, life cycle considerations, aesthetics, and the overall quality and character of the facilities. The design of park and ride facilities shall be compatible with the immediate vicinity and reflect the regional context of the Wasatch Front.

In all project segments, it is imperative to ensure meticulous coordination of the final design with UTA, the affected communities and neighborhoods, adjacent property owners or developers, public agencies, and community groups that have jurisdiction over or a significant interest in the human environment and the design of facilities at stations and along routes. This coordination with the development plans and master plans of local communities and neighborhoods is essential to seamlessly integrate the transit system into the urban fabric of the Wasatch Front, thereby ensuring that the needs of both UTA and the community are met.

20.2 Scope

This section establishes specific guidelines and standards for the design of bus access, kiss-and-ride and park-and-ride facilities. Equipment, shelters, and signage used in park-and-ride lots shall be the same system-wide and compatible with UTA's identity. Deviations from standard design elements may be required for specific sites but shall be approved by UTA before design proceeds.

20.3 Codes and Standards

Applicable codes and standards include the most current edition of the following documents:

- American Public Works Association (APWA)
- American Association of State Highway and Transportation Officials (AASHTO):
    - A Policy on Geometric Design of Highways and Streets
    - Guide for the Development of Bicycle Facilities
    - Guide for the Planning, Design, and Operation of Pedestrian Facilities
    - Roadside Design Guide
- Utah Department of Transportation Standard and Supplemental Drawings and Specifications

- Applicable Local Jurisdictional Ordinances and Standard Drawings
- Americans with Disabilities Act (ADA)

In instances where the codes do not provide provisions for specific design features, the best civil engineering practices shall be followed, subject to prior approval from UTA.

20.4 Lighting

Refer to Chapter 8 of this manual for lighting design guidelines.

20.5 General Park and Ride Site Design Guidelines

20.5.1 Vehicular Entrances and Exits to Station Site Facilities

The design of entrances for motor vehicles shall take into consideration adjacent land uses by avoiding large unplanted, paved areas or dimensions that are out of scale compared to adjacent streets and structures. The number of curb cuts shall be minimized, while fulfilling the following requirements:

- Access is preferred from minor arterials and collectors.
- Access roadways to station sites should be designed to provide sufficient traffic storage capacity to meet expected transit patronage at peak times and to prevent traffic from backing up onto public streets.
- Conflicts between access roadways and significant pedestrian movements should be avoided.
- For a station site with more than 1,000 spaces, access from multiple streets is desirable to facilitate several feeder routes.
- Apply access management principles as much as possible. Coordination with local jurisdictions and the Utah Department of Transportation shall anticipate potential future road relocations or changes that can be reasonably expected.
- Park-and-ride lots should be located and designed to ensure they do not contribute to more than 5 percent of any single traffic movement to an intersection operating at, or projected to operate at, a level of service D or worse during peak hours.
- Turning movements into and out of park-and-ride lots need to be evaluated to minimize idle time and promote driver safety.
- Consideration should be given to locating access to park-and-ride lots for buses at signalized intersections.

20.5.2 Kiss-and-Ride Facilities

Kiss-and-ride drop-off and short-term parking facilities in the station area shall:

- Allow easy movement to locations near the station platforms.
- Be separated from the long-term parking area.
- Have stall widths of at least 10 feet to facilitate quick vehicle movements in and out, marked with appropriate paint striping and pavement messaging.
- Be marked with "Pick-Up and Drop-Off Only" signs (see graphic) that meet the following criteria:
    - Size: 12 inches wide by 18 inches high
    - Material: 63-millimeter-thick laminated Engineering Grade Reflective Aluminum

Parking lot design and landscaping, as detailed in Chapter 9, may be subject to local jurisdictional requirements. The preferred parking arrangements for kiss-and-ride areas are in the following order of preference:

- Parallel to the curb (refer to Figure 20-1).
- At a 45-degree angle to the aisle (refer to Figure 20-2).
- At a 60-degree angle to the aisle (refer to Figure 20-3).

Figures 20-1 through 20-3 illustrate the recommended stall and aisle widths for the kiss-and-ride area.

Figure 20-1: Kiss-and-Ride Parking Arrangement Stall Layout Parallel to Curb

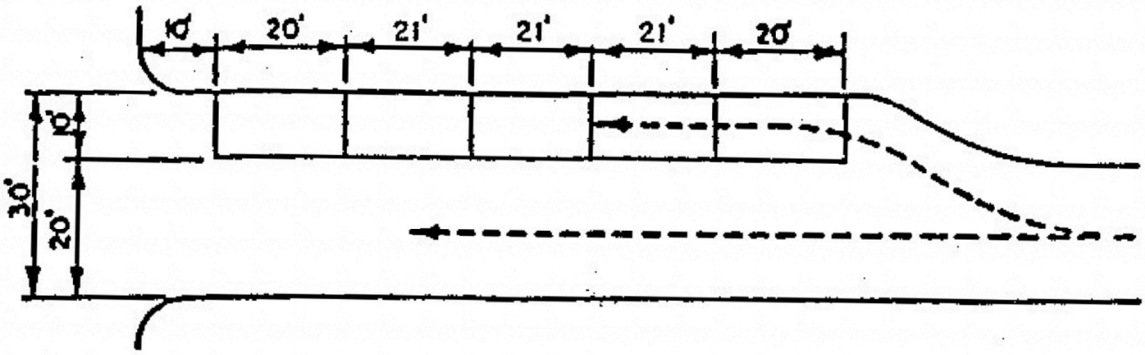

KISS-AND-RIDE FACILITY WITH ONE DROP-OFF LANE

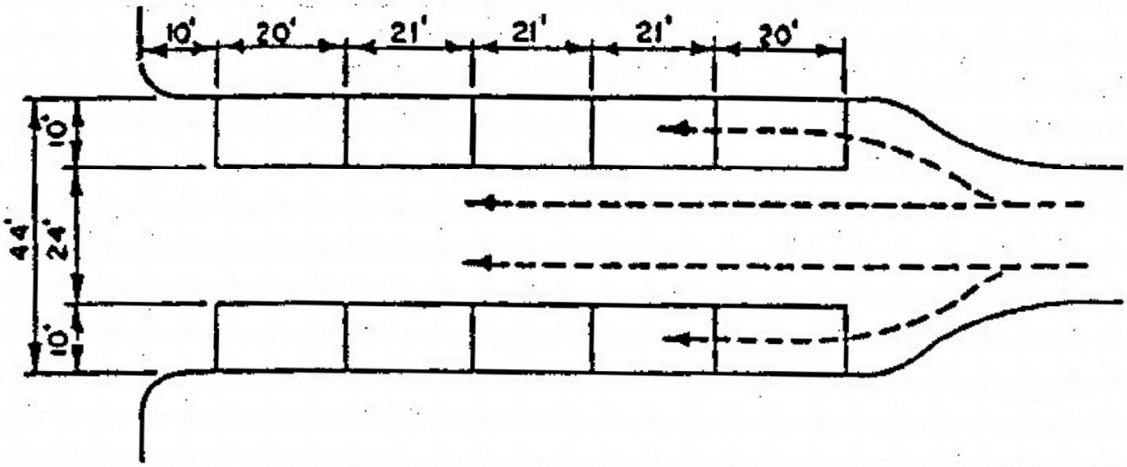

KISS-AND-RIDE FACILITY WITH TWO DROP-OFF LANES

Figure 20-2: Kiss-and-Ride Parking Arrangement Stall Layout 45˚

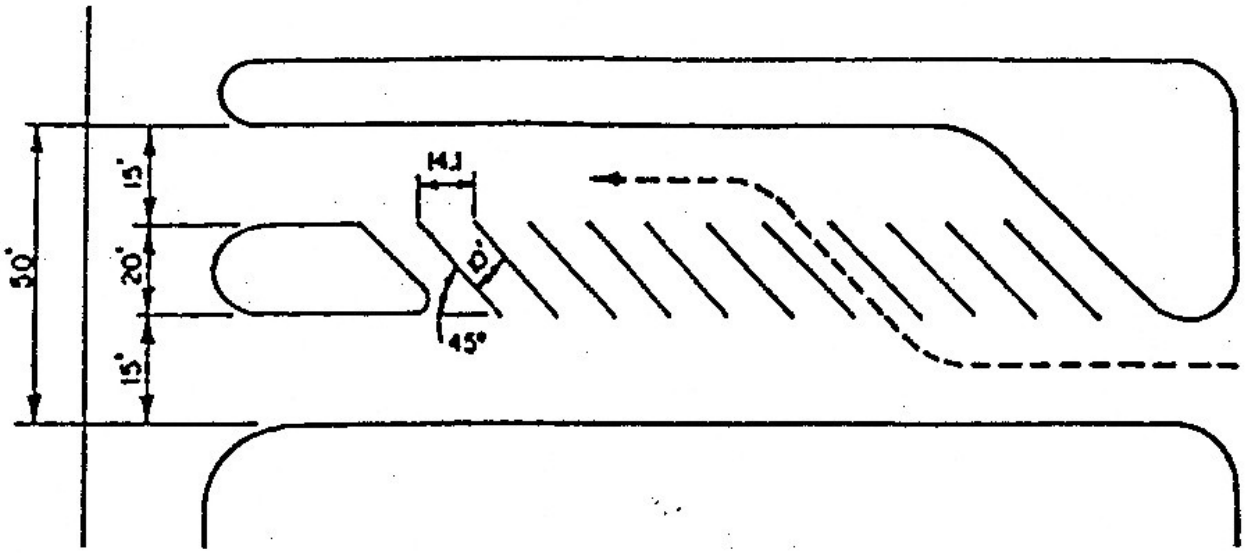

KISS-AND-RIDE FACILITY

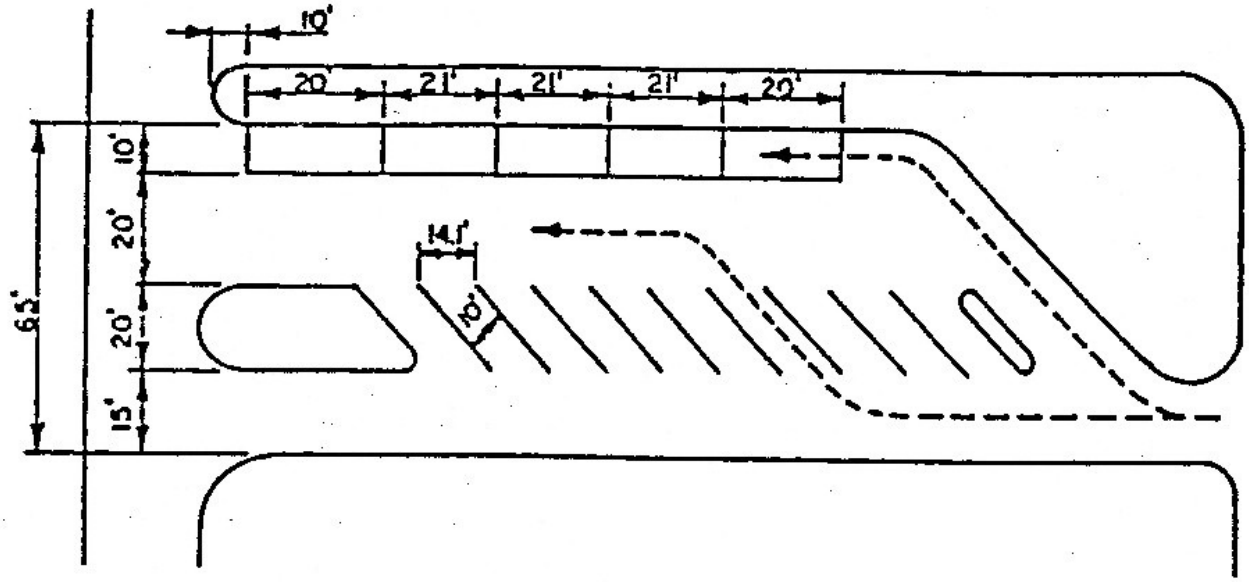

KISS-AND-RIDE FACILITY WITH DROP-OFF LANE

Figure 20-3: Kiss-and-Ride Parking Arrangement Stall Layout 60°

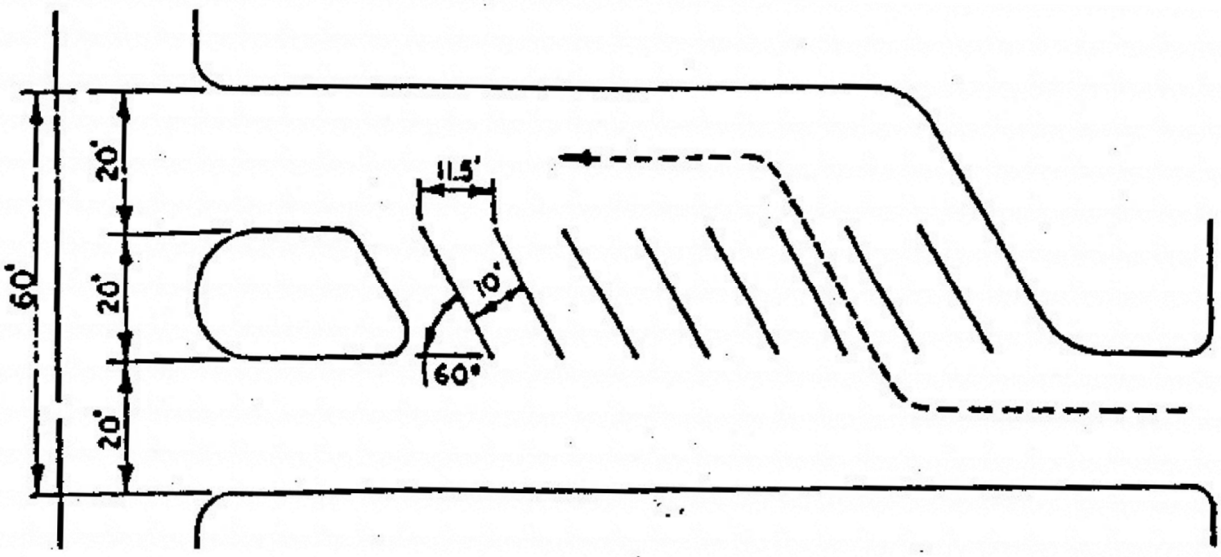

KISS-AND-RIDE FACILITY

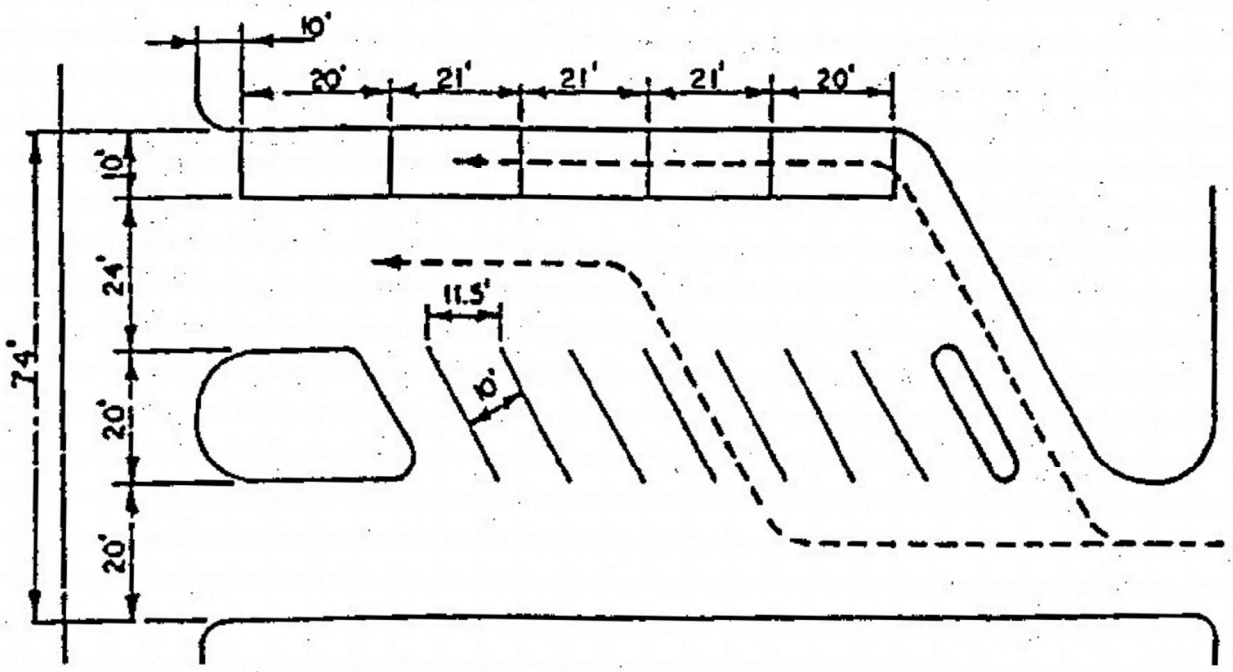

KISS-AND-RIDE FACILITY WITH DROP-OFF LANE

20.5.3 Automobile Parking Facilities

The design of parking lot areas shall optimize the allocated site area, using the dimensions provided in Table 20-1 and as outlined in the subsequent sections. The design shall conform to local jurisdiction requirements. For civil element criteria related to the site work of the facility, refer to Chapter 5 of this manual. Site work shall adhere to the standards and specifications of the American Public Works Association or the Utah Transit Authority, wherever possible. Additionally, stormwater management shall comply with local jurisdiction requirements.

Table 20-1: Minimum Stall Sizes for Park-and-Ride Parking

Angle	Stall Width (feet)	Stall Depth (feet)	1-Way Traffic Aisle (feet)	2-Way Traffic Aisle (feet)
90	9	18	24	24
80	9	18	23	23
70	9	18	19	19
60	9	18	18	18
50	9	18	16	22
45	9	18	16	22
40	9	18	16	22
30	9	18	16	22
20	9	18	16	22
0	9	23	12	18

20.5.4 Motorcycle Parking

Motorcycle parking stalls may be incorporated into triangles and corners delineated by the park-and-ride layout, ensuring they are readily accessible to the station.

20.5.5 Bicycle Storage

Bicycle storage shall be provided as directed by UTA. The racks shall conform to the following requirements:

- Be located in a readily visible area.
- Be situated to minimize interference with other station activities.
- Provide a secure stanchion that allows bicycles to be locked.

The location of the bicycle racks shall be coordinated with UTA and the local jurisdiction.

20.5.6 Borders of Parking Areas

Parking lots should be designed to avoid the use of earth retaining structures and to ensure all work remains within UTA's right-of-way lines. Curbs should be installed along all edges of the parking lot. Additionally, borders should be sufficiently wide to accommodate landscaping and planting. The design shall also consider requirements for stormwater management in both the parking lot and its borders.

20.5.7 Pedestrian Access

Pedestrian circulation shall provide direct and convenient approaches to station platforms from off-site areas and from each section of the parking lot. The orientation of parking aisles shall be planned with consideration for pedestrian directness, lot capacity, and safety. While pedestrian movements within the park-and-ride area will normally occur within the driving aisles, pedestrian walkways may be provided to minimize vehicular interference. These walkways should reduce the number of crossing points across aisles and shorten irregular routes through successive aisles significantly. Where installing walkways, ensure a minimum of 5 feet of clear area, excluding any vehicle overhang.

Pedestrian access to station platforms shall conform to ADA requirements, including the provision of tactile warning surfaces.

Sidewalks along adjacent roadways will be required if mandated by local jurisdictional requirements.

Pedestrian crossings at entrances, existing roads, and within the parking lot should be clearly striped or delineated. Crosswalks and delineated pedestrian areas shall be constructed from hard surface materials that are durable and slip-resistant, such as asphalt, concrete, or textured and colored concrete.

20.5.8 ADA

Accessible parking spaces should be clearly designated as reserved by signs displaying the symbol of accessibility. These parking spaces are required to be located adjacent to the passenger loading and platform areas, or as close as is reasonably possible. Parking spaces and access aisles for persons with disabilities should have level surfaces with appropriate slopes to meet ADA standards. The number and dimensions of these parking stalls at each facility shall comply with current ADA guidelines for accessible parking.

20.5.9 Park-and-Ride Entrance Signs

Where possible, illuminated station name signs in UTA standard royal blue should be provided near park-and-ride entrances. These signs may be the same as those used for the station monument signs. All signs shall comply with the current UTA signage standards.

20.5.10 Snow Removal

Parking lots, curbs, medians, islands, sidewalks, and walkways should be designed to facilitate quick and easy snow removal, ensuring that the lots remain continuously available during inclement weather.

20.6 Crime Prevention and Vandal Resistance

This section addresses two aspects of crime: preventing crimes against passengers and protecting UTA property, particularly from vandalism. Thoughtful planning and design of facilities, coupled with careful selection of building materials and products, can significantly reduce both types of crime.

Facility planning and design shall incorporate Crime Prevention Through Environmental Design (CPTED) principles, which aim to reduce criminal behavior incidence and severity by creating a built environment that deters crime. The central principle of CPTED, known as natural surveillance, involves planning a facility such that its legitimate users (passengers and staff) can easily observe all areas while these users are seen by potential criminals as being clearly in control.

Key CPTED strategies for park-and-ride lots include:

- Area identity: The zone around a station shall be clearly designated for passengers boarding or alighting transit vehicles, using other transit modes, and accessing legitimate secondary transit facilities.
- Boundary Demarcation: Clear signage shall demarcate the boundaries of the designated “transit use” zone around the park-and-ride. This zone can be further defined by distinct paving materials, finishes, structures, site furnishings, lighting, or landscape plantings.
- Lighting: Park-and-rides shall be well-lit at night to protect passengers and aid surveillance by public safety and law enforcement personnel.
- Natural Surveillance: Locating park-and-rides in direct view of occupied residences or staffed businesses during operating hours allows for constant, natural surveillance.

- Clear Lines of Sight: The design and placement of vertical structures, such as walls, screens, and shelters, shall ensure clear lines of sight into the park-and-ride area by public safety and law enforcement personnel. Using transparent materials (e.g., glass and glass block) or screen-like materials (e.g., expanded metal mesh and wiregrids) enhances natural surveillance.

20.6.1 System Safety and Security

For information on System Safety and System Security, refer to Chapter 14 'Communications'.

20.6.2 EV Charging

Refer to Chapter 8 'Stations and Stops', Section 8.2.2 'EV Bus Charging', for additional description and requirements.

Charging facilities for personal vehicles will not be provided by UTA, unless they are paid for and maintained by an entity other than UTA.

The provision of charging locations for UTA ride-share, micro-transit, or other UTA vehicles should be evaluated on a case-by-case basis and located near a power source.

END OF CHAPTER 20.